Technical Sales Guide

Multi Variable Air Conditioners Indoor Unit

(GC202409-I)

Rated Frequency: 60Hz

Capacity Range: 5800~96000Btu/h

GREE ELECTRIC APPLIANCES, INC. OF ZHUHAI

CONTENTS

1. Product Characteristic

1.1 Low Static Pressure Duct Type Indoor Unit

Features	Characteristic
	◆ Low static pressure, low noise Especially suitable for rooms with compact structure or samll installation space. Also it provides you with a comfortable and quiet living environment. ◆ Convenient installation Tab type plastic filter, detachable fan motor, independent water pump assembly, all for covenient maintenance. ◆ Intelligent drainage device The lift height of the drain pump is up to3-5/16ft. which can effectively drain out condending water ande save space. ◆ Protection function Water overflow protection, anti-freezing protection, fan motor overload protection, temperature sensor malfunction protection.
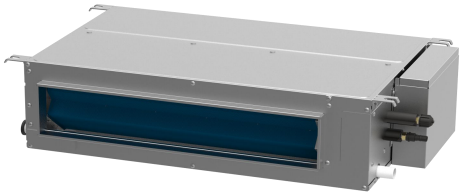	◆ High-efficiency DC brushless motor is used. Its efficiency is improved by over 30% compared with common motor. Evaporator flow path adopts simulating optimized design via the refrigeration system simulation software, which has greatly increased the heat exchange capacity of evaporator. ◆ Slim & compact The unit has only 200mm of thickness and 462mm depth, and can be installed into limited ceiling void. ◆ Wiring of electric control box Wiring board of electric control box elements are arranged at both sides of the wring board of fan motor. There is a wire-cross notch on each side so that wiring of the wring board of fan motor is convenient and efficient. Strong and weak current are also separated to ensure the effectiveness of week current signal transmission. ◆ Protection functions Anti-freezing protection, fan motor built-in overload protection, temperature sensor protection. ◆ Ultra-quiet High-efficiency centrifugal fan and ultralow noise volute are developed with ANSYS and Fluent. They have also gained chinese national patents. Meanwhile, low-noise EXV is adopted so that noise of the unit is greatly reduced. ◆ Fast & strong Intelligent temperature control technology is adopted. Cooling/ Heating function is fast and strong so that room temperature can quickly reach set temperature. ◆ Flexible Installation Based on the requirements of building and utilization, different ways of air return and different air supply static pressure can be selected. ◆ CAN bus communication technology System response speed is faster and communication is more reliable. Auto addressing, non-polar communication, free wire matching. ◆ Convenient maintenance Electric control box is attached independently so that it can be detached as a whole, which is convenient

1.2 Slim Duct Type Indoor Unit

Features	Characteristic
	◆ High-efficiency DC brushless motor is used. Its efficiency is improved by over 30% cmpared with common motor. Evaporator flow path adopts simulating optimized design via the refrigeration system simulation software, which has greatly increased the heat exchange capacity of evaporator. ◆ Slim & small The unit has only 200mm of thickness and 462mm depth, and can be installed into limited ceiling void. ◆ Wiring of electric control box Wiring board of electric control box elements are arranged at both sides of the wiring board of fan motor. There is a wire-cross notch on each side so that wiring of the wiring board of fan motor is convenient and efficient. Strong and weak current are also separated to ensure the effectiveness of week current signal transmission. ◆ Protection functions Anti-freezing protection, fan motor built-in overload protection, temperature sensor protection ◆ Ultra-quiet High-efficiency centrifugal fan and ultralow noise volute are developed with ANSYS and Fluent. They have also gained national patents. Meanwhile, inlet mute valve is adopted so that noise of the complete unit is greatly reduced. ◆ Fast & strong Intelligent temperature control technology is adopted. Cooling/ Heating function is fast and strong so that room temperature can quickly reach set temperature ◆ Flexible installation Based on the requirements of building and utilization, different ways of air return and different air supply static pressure can be selected. ◆ CAN bus communication technology System response speed is faster and communication is more reliable. Auto addressing, non-polar communication, free wire matching. ◆ Convenient operation & maintenance Electric control box is attached independently so that it can be detached as a whole, which is convenient fr fan and motor is also convenient

1.3 Four-way Cassette Type Indoor Unit

Features	Characteristic
	◆ Strong and balanced airflow Unit features auto operation, 4-way airflow, 7 fan speeds and strong circulating airflow. ◆ DC inverter motor With good speed regulation performance, motor efficiency improved by 30% vs. normal motor. ◆ Ultra-low noise operation DC inverter motor can realize stepless speed regulation to lower noise. Indoor unit can be set auto quiet mode via wired controller. ◆ Protection function Water overflow protection, anti-freezing protection, temperature sensor malfunction protection, fan motor overload protection. ◆ Intelligent drainage device The lift height of the drain pump is up to 3-5/16 ft. which can effectively drain out condensing water and save space.

1.4 High Static Pressure Duct Type Indoor Unit

Features	Characteristic
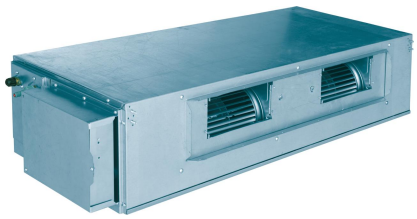	◆ High static pressure design Static pressure can be up to 150Pa(0.6 In.W.G), especially suitable for places in need of long distance airflow. ◆ Convenient installation Circular air duct and rectangular air duct can be supplied based on the actual needs, and the rear air return vent and lower air return vent can also be chose based on the needs. ◆ Easy maintenance The system has maintenance port for easy maintenance. ◆ Protection function Anti-freezing protection, fan motor overload protection, temperature sensor malfunction protection.

1.5 Floor Ceiling Type Indoor Unit

Features	Characteristic
	◆ Flexible installation Ceiling suspending or floor standing installation convertible. ◆ Protection function Anti-freezing protection, temperature sensor malfunction protection, fan motor overload protection. ◆ Beautiful appearance With beautiful and elegant front panel, it is congenial to the indoor surroundings. ◆ Horizontal and vertical air swing Wider air swing range for your comfortable working and living environment.

1.6 Wall Mounted Type Indoor Unit

Features	Characteristic
	◆ Filter can be cleaned The filter is removable and can be cleaned for easy maintenance. ◆ Quiet design High-efficiency cross flow blade and imported silence valve are adopted, which greatly reduce the noise of entire unit. ◆ One IDU with several wired controller and several IDUs with one wired controller One IDU can be connected with several wired controllers in order to control one IDU from different location; meanwhile, several IDUs can be connected with one wired controller in order to achieve centralized control of 16 IDUs in maximum. ◆ Wide air supply range The air supply range is wide, so that the wind can be delivered to each corner of the room naturally and evenly. ◆ Super cooling and heating function Intelligent temperature control technology is adopted with super cooling and heating function, so that the room temperature can reach set temperature rapidly. ◆ I-feel function When I-feel function is activated, the unit can detect the temperature around the user and adjust the temperature, so that the comfort of user is improved. (Remote controller shall be equipped) ◆ Panel is removable The panel of indoor unit can be removed easily for convenient maintenance. The response of the system is quicker with more reliable communication; auto addressing, non-polar communication and free wiring are available. ◆ Multiple protections Anti-freezing protection, temperature sensor malfunction protection, fan motor overload protection.

1.7 Fresh Air Processing Type Indoor Unit

Features	Characteristic
	◆ Fresh Air Processing Indoor Unit Airflow volume: 589CFM~2060CFM Applicable range: Residential houses, villas, business buildings, hotels, apartments, etc. ◆ One system, two functions Adopted with DC inverter technology, Fresh Air DC Inverter Multi VRF System features air conditioning function and fresh air function. ◆ Enjoy fresh air ◆ Less investment Fresh Air DC Inverter Multi VRF System can be combined with Gree GMV5. For a same room, if the same amount of fresh air is to be taken, then the cost of GMV5+Fresh air unit is equivalent to the cost of GMV+Air exchange fan. ◆ Less operation cost Unit can control refrigerant output according to actual needs to ensure constant airflow temperature. By adjusting power output, light-load but high power operation can be avoided. Thus, operation cost can be greatly reduced. ◆ Less installation space Save installation space for outdoor units. Especially suitable for places that have restricted installation space.
	

1.8 Console Type Indoor Unit

Features	Characteristic
	◆ Multiple fan speed The fan can operate in multiple speed and satisfy different air flow volume requirements. ◆ High drain pump lift Drain pump lift reaches 1.0m, which can effectively drain out water. ◆ Detachable grille and long life filter Grille is detachable for easy cleaning. With long life filter, cleaning cycle is 20 times longer. ◆ Protection function Water overflow protection, anti-freezing protection, fan motor overload protection, temperature sensor malfunction protection, auxiliary electric heating overheat protection (This function is not included in pure heat pump unit).

1.9 Two-way Cassette Type Indoor Unit

Features	Characteristic
	◆ Beautiful Appearance With beautiful and elegant front panel, it is congenial to the indoor surroundings. ◆ Two-way air flow design Two-way air outlet, to stretch air outlet distance and solve air supply problem of elongated room ◆ Intelligent drainage device The lift height of the drain pump is up to 1.0m., which can effectively drain out condensing water and save space. ◆ Multiple protections Anti-freezing protection, temperature malfunction protection, fan motor overload and humidity sensor protection.

Features	Characteristic
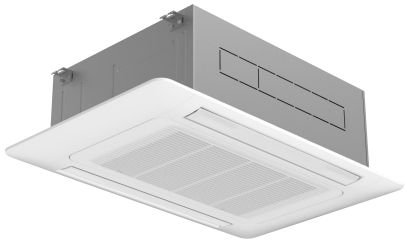	◆ Two-way air supply The double-sided air outlet lengthens the air supply distance to solve the problem of difficult air supply in narrow and long rooms. ◆ New streamlined appearance design The new generation of two-way cassette unit adopts a brand new front panel design, making it visually pleasing and perfectly fit into indoor decoration. ◆ Independent swing control There are two air deflectors that can be controlled independently to adjust the air supply direction. They can make different combinations of air swing angles to avoid direct airflow to people. *It must be used with the wired controller (XE70-33/H). ◆ Automatic louver control The front panel adopts an arc design for the end of air deflectors. With structural simulation analysis,the best air supply angle was simulated. In cooling mode, the unit can achieve horizontal air supply. In heating mode, it can achieve vertical air supply. ◆ Standard fitting 1200mm(47-1/4inch) condensate water lift pump ◆ Quiet fan blade design, low noise operation ◆ Compact body design

1.10 Compact Four-way Cassette Type Indoor Unit

Features	Characteristic
	◆ Compact design for easy installation Units maintain the uniform length and width with consistent ceiling opening and panel dimension, convenient for design and installation. ◆ Ultra-low noise operation DC inverter motor can realize stepless speed regulation to lower noise. Indoor unit can be set to work under anto quiet mode via wired controller. ◆ Intelligent drainage device The lift height of the drain pump is up to 3-5/16 ft.which can effectively drain out condensing water and save space.

1.11 Super High Static Pressure Duct Type Indoor Unit

Features	Characteristic
	◆ High static pressure design Static pressure can be up to 275Pa(1.1In.W.G), especially suitable for places in need of long distance airflow. ◆ Convenient installation You can choose circular air duct or rectangular air duct according to actual needs. Or you can choose different ways of air return. ◆ Easy maintenance The system has maintenance port for easy maintenance. ◆ Protection function Anti-freezing protection, fan motor overload protection, temperature sensor malfunction protection.

1.12 Air Handler Type Indoor Unit

GMV-ND**A/A-T(U)

Features	Characteristic
	◆ Multiple fan speed The fan can operate in multiple speed and satisfy different air flow volume requirements. ◆ DC inverter motor With good speed regulation performance, motor efficiency improved by 30% vs. normal motor. ◆ Ultra-low noise operation DC inverter motor can realize stepless speed regulation to lower noise. Indoor unit can be set auto quiet mode via wired controller. ◆ Protection function Anti-freezing protection, fan motor overload protection, temperature sensor malfunction protection.

GMV-ND**A/B-T(U)

Features	Characteristic
	◆ High static pressure design and multiple static pressure modes for long distance air supply Nine static pressure modes and maximum static pressure of 250Pa adopted for enabling long distance air supply, convenient for engineering application. ◆ Multiple electric heaters optional Four electric heaters (5kW~15kW) can be selected for diversified engineering selection ◆ Flexible installation Vertical installation and horizontal installation can be selected flexibly according to building and operation requirements. ◆ DC motor design, energy saving and high efficiency operation DC motor, achieving stepless adjustment of the speed, more stable. ◆ Multifunctional wired controller The multi-function wire controller adopts a large-size touch screen with backlighting, black and white dot matrix LCD display, and can achieve weekly timing settings.

1.13 AHU-KIT Type Indoor Unit

Features	Characteristic
 	◆ Mathing with the indoor unit for connecting to the GMV outdoor uint. Connected to VRF system of air handling unit and retained the original user function and project application function of VRF system. Installation, commissioning, operation and maintenance are more convenient. ◆ Multiple installation methods for convenient project design. The air handling unit equipped with AHU-KIT has multiple methods for connecting VRF system. It can independently connect to VRF system to compose a one-to-one proposal; it can also match with other air handling unit or general VRF indoor units to connect to the same VRF system for composing a one-to-more proposal. Which is more adaptable for different projects. ◆ Independent design, convenient installation. AHU-KIT is composed by two independent boxes(electronic expansion valve and control box) and designed independently, which is convenient for installation and application. ◆ Error signal is connected for reliable installation and operation. Error signal of air handling unit is connected to AHU-KIT. Where there's malfunction, the unit will stop operation, safe and reliable.

1.14 1-way Cassette Type

Features	Characteristic
	◆ Beautiful Appearance With beautiful and elegant front panel, it is congenial to the indoor surroundings. ◆ One-way air flow design One-way air outlet, to stretch air outlet distance and solve air supply problem of elongated room. ◆ Intelligent drainage device The lift height of the drain pump is up to 1.0m, which can effectively drain out condensing water and save space. ◆ Multiple protections Anti-freezing protection, temperature malfunction protection, fan motor overload and humidity sensor protection.

1.15 General Static Pressure Duct Type Indoor Unit

Features	Characteristic
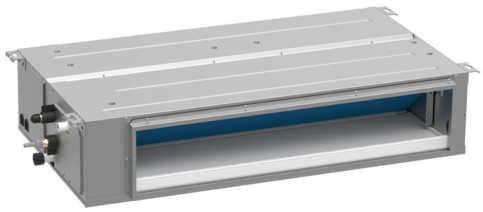	◆ Low static pressure, low noise Especially suitable for rooms of compact structure or small installation space. Also it provides you with a comfortable and quiet living environment. ◆ Convenient installation Tab type plastic filter, detachable fan motor, independent water pump assembly, all for convenient maintenance. ◆ Intelligent drainage device Water height difference up to 3-5/16ft. which can effectively drain out condensing water and save space. ◆ Protection function Water overflow protection, anti-freezing protection, fan motor overload protection, temperature sensor malfunction protection.

1.16 360°Air Discharge Compact Cassette Indoor Unit

Features	Characteristic
	◆ 360° Air Supply 360°air supply design for wide air supply range and balanced temperature distribution, more comfortable. ◆ Independent Swing Control 4 swing blades can be controlled independently； multiple air supply angle combinations is available for free and humanized control, avoiding direct air blow to people. ◆ New Air Duct and Blade Design for Low Noise Adopt new air duct and blade with fluid simulation design for lower noise; noise is as low as 25dB. ◆ DC Quiet Drainage Pump The lift height of the drain pump is up to 1.2m, which can effectively drain out condensing water and save space. Adopting high-lift DC quiet type drainage pump for lower power consumption and better sound quality; the maximum lifting height is 1200mm; installation is more flexible and the drainage pipe layout is more convenient.

1.17 360° Air Discharge Cassette Indoor Unit

Features	Characteristic
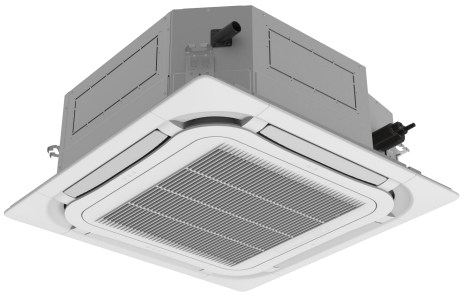	◆360° Air Supply. 360°air supply design for wide air supply range and balanced temperature distribution, more comfortable. ◆Independent Swing Control. 4 swing blades can be controlled independently; multiple air supply angle combinations is available for free and humanized control, avoiding direct air blow to people. ◆Ultra-low noise operation. DC inverter motor can realize stepless speed regulation to lower noise. Indoor unit can be set to work under auto quiet mode via wired controller. ◆DC Quiet Drainage Pump Water height difference up to 1.2m, which can effectively drain out condensing water and save space. Adopting high-lift DC quiet type drainage pump for lower power consumption and better sound quality; the maximum lifting height is 1200mm; installation is more flexible and the drainage pipe layout is more convenient.

1.18 Dual Fuel A-coil Indoor Unit

Features	Characteristic
	◆Comfortable and efficient A-coil is matched with DC frequency multi variable air conditioners outdoor Unit, and the operating environment temperature range is -22 ℉~129℉.High energy efficiency can provide users with a comfortable and economical cooling and heating experience all year round. ◆Easy installation A-coil can be installed directly in series with the gas furnace， and a single air duct can meet the needs of users, which is simpler and more efficient than regular central air conditioners that require additional air duct. ◆Free collocation A-coil can be used alone with multiple external units or with other common indoor units of air conditioners to form a huge multi variable air conditioners system, which is suitable for various scenes such as families and shopping malls. ◆Ultra Heat Strong Heat Pairing with outdoors units of the Ultra Heat GMV6 mini-series, A-coil can provide 100% heating capacity at -4 ℉ , achieving minimum operation at -22 °F, providing users with a comfortable experience in extreme climates.

2. Unit Parameters

2.1 Low Static Pressure Duct Type Indoor Unit

Model				GMV-ND07PL S/A-T(U)	GMV-ND09PL S/A-T(U)	GMV-ND12PL S/A-T(U)	GMV-ND14PL S/A-T(U)	GMV-ND18PL S/A-T(U)	GMV-ND22PL S/A-T(U)
Product Code				CM810N0080	CM810N0090	CM810N0100	CM810N0120	CM810N0070	CM810N0110
Cooling Capacity			Btu/h	7500	9500	12000	15000	18000	24000
			kW	2.2	2.8	3.5	4.4	5.3	7.0
Heating Capacity			Btu/h	8500	10500	13500	17000	20000	27000
			kW	2.5	3.1	4.0	5.0	5.9	7.9
Casing Finish				Galvanized Steel plate					
Dimensions (W×D×H)	Outline		mm	700×615×200	700×615×200	700×615×200	900×615×200	1100×615×200	1100×615×200
			inch	27-9/16×24-3/16×7-7/8	27-9/16×24-3/16×7-7/8	27-9/16×24-3/16×7-7/8	35-7/16×24-3/16×7-7/8	43-5/16×24-3/16×7-7/8	43-5/16×24-3/16×7-7/8
	Packaging		mm	893×743×305	893×743×305	893×743×305	1123×743×305	1323×743×305	1323×743×305
			inch	35-3/16×29-1/4×12	35-3/16×29-1/4×12	35-3/16×29-1/4×12	44-3/16×29-1/4×12	52-1/16×29-1/4×12	52-1/16×29-1/4×12
Net Weight			LBS	51	51	51	60	69	69
			kg	23	23	23	27	31	31
Gross Weight			LBS	64	64	64	73	86	86
			kg	29	29	29	33	39	39
Pipe Connection	Liquid Side		mm	Φ6.35	Φ6.35	Φ6.35	Φ6.35	Φ9.52	Φ9.52
			inch	Φ1/4	Φ1/4	Φ1/4	Φ1/4	Φ3/8	Φ3/8
	Gas Side		mm	Φ9.52	Φ9.52	Φ12.7	Φ12.7	Φ15.9	Φ15.9
			inch	Φ3/8	Φ3/8	Φ1/2	Φ1/2	Φ5/8	Φ5/8
	Drain Pipe		mm	Φ25	Φ25	Φ25	Φ25	Φ25	Φ25
			inch	Φ1	Φ1	Φ1	Φ1	Φ1	Φ1
Power Supply				1-phase 208/230V 60Hz					
Fan	Type * Quantity			Centrifugal*2	Centrifugal*2	Centrifugal*2	Centrifugal*3	Centrifugal*4	Centrifugal*4
	Driving Mechanism			Direct-driven					
	Motor Type			BLDC					
	Motor Power Input		W	43	43	43	52	99	99
	Motor Running Current		A	0.3	0.3	0.3	0.5	0.7	0.7
	Airflow Rate(H/M/L)		CFM	265/235/147	265/235/147	324/265/206	412/353/265	589/471/353	589/471/353
			m^3/h	450/400/250	450/400/250	550/450/350	700/600/450	1000/800/600	1000/800/600
	External Static Pressure	Default	In.W.G	0.06	0.06	0.06	0.06	0.06	0.06
			Pa	15	15	15	15	15	15
		Range	In.W.G	0~0.12	0~0.12	0~0.12	0~0.12	0~0.12	0~0.12
			Pa	0~30	0~30	0~30	0~30	0~30	0~30
Sound Pressure Level(H/M/L)			dB(A)	31/29/25	31/29/25	32/30/27	33/31/28	35/33/30	35/33/30
Heat Exchanger				Fenestrate plain film --hydrophilic film					
Air Filter				PP					
Refrigeration Control Device				EXV					
Protection Device				Fuse					

Model				GMV-ND05PLS/B1-T(U)	GMV-ND07PLS/B1-T(U)	GMV-ND09PLS/B1-T(U)
Product Code				CM810N2170	CM810N2190	CM810N2180
Cooling Capacity			Btu/h	5800	7500	9500
			kW	1.7	2.2	2.8
Heating Capacity			Btu/h	6200	8500	10500
			kW	1.8	2.8	3.2
Casing Finish				Galvanized Steel plate		
Dimensions (W×D×H)	Outline		mm	710×462×200	710×462×200	710×462×200
			in.	28×18-3/16×7-7/8	28×18-3/16×7-7/8	28×18-3/16×7-7/8
	Packaging		mm	1025×570×285	1025×570×285	1025×570×285
			in.	40-1/4×22-1/3×10-5/8	40-1/4×22-1/3×10-5/8	40-1/4×22-1/3×10-5/8
Net Weight			lbs.	41	41	41
			kg	18.5	18.5	18.5
Gross Weight			lbs.	52	52	52
			kg	23.5	23.5	23.5
Pipe Connection	Liquid Side		mm	Φ6.35	Φ6.35	Φ6.35
			in.	Φ1/4	Φ1/4	Φ1/4
	Gas Side		mm	Φ9.52	Φ9.52	Φ9.52
			in.	Φ3/8	Φ3/8	Φ3/8
	Drain Pipe		mm	Φ25	Φ25	Φ25
			in.	Φ1	Φ1	Φ1
Power Supply				1-phase 208/230V 60Hz		
Fan	Type * Quantity			Centrifugal*2	Centrifugal*2	Centrifugal*2
	Driving Type			Direct-driven		
	Motor Type			BLDC		
	Motor Power Input		W	30	30	30
	Motor Running Current		A	0.16	0.16	0.16
	Airflow Rate(H/M/L)		CFM	265/206/118	265/206/118	265/206/118
			m^3/h	450/350/200	450/350/200	450/350/200
	External Static Pressure	Default	in.W.G.	0.06	0.06	0.06
			Pa	15	15	15
		Range	in.W.G.	0~0.12	0~0.12	0~0.12
			Pa	0~30	0~30	0~30
Sound Pressure Level(H/M/L)			dB(A)	30/25/22	30/25/22	30/25/22
Heat Exchanger				Copper tubes with louvered hydrophilie AL fine		
Air Filter				PP		
Refrigeration Control Device				EXV		
Protection Device				Fuse		

Model				GMV-ND12PLS/B1-T(U)	GMV-ND14PLS/B1-T(U)	GMV-ND18PLS/B1-T(U)	GMV-ND24PLS/B1-T(U)
Product Code				CM810N2220	CM810N2200	CM810N2210	CM810N2230
Cooling Capacity			Btu/h	12000	15000	18000	24000
			kW	3.6	4	5.6	7.1
Heating Capacity			Btu/h	13500	17500	20000	27000
			kW	4	4.5	6.3	8
Casing Finish				Galvanized Steel plate			
Dimensions (W×D×H)	Outline		mm	710×462×200	1010×462×200	1010×462×200	1310×462×200
			in.	28×18-3/16×7-7/8	39-3/4×18-3/16×7-7/8	39-3/4×18-3/16×7-7/8	51-4/7×18-3/16×7-7/8
	Packaging		mm	1025×570×285	1322×570×285	1625×570×285	1625×570×285
			in.	40-1/4×22-1/3×10-5/8	52×22-1/3×10-5/8	52×22-1/3×10-5/8	64×22-1/3×10-5/8
Net Weight			lbs.	42	55	55	68
			kg	19	25	25	31
Gross Weight			lbs.	53	68	68	83
			kg	24	31	31	37.5
Pipe Connection	Liquid Side		mm	Φ6.35	Φ6.35	Φ9.52	Φ9.52
			in.	Φ1/4	Φ1/4	Φ3/8	Φ3/8
	Gas Side		mm	Φ12.7	Φ12.7	Φ15.9	Φ15.9
			in.	Φ1/2	Φ1/2	Φ5/8	Φ5/8
	Drain Pipe		mm	Φ25	Φ25	Φ25	Φ25
			in.	Φ1	Φ1	Φ1	Φ1
Power Supply				1-phase 208/230V 60Hz			
Fan	Type * Quantity			Centrifugal*2	Centrifugal*2	Centrifugal*2	Centrifugal*2
	Driving Type			Direct-driven			
	Motor Type			BLDC			
	Motor Power Input		W	30	30	60	80
	Motor Running Current		A	0.16	0.16	0.29	0.3
	Airflow Rate(H/M/L)		CFM	324/235/177	441/324/235	500/412/324	647/500/383
			m^3/h	550/400/300	750/550/400	850/700/550	1100/850/650
	External Static Pressure	Default	in.W.G.	0.06	0.06	0.06	0.06
			Pa	15	15	15	15
		Range	in.W.G.	0~0.12	0~0.12	0~0.12	0~0.12
			Pa	0~30	0~30	0~30	0~30
Sound Pressure Level(H/M/L)			dB(A)	31/27/25	33/29/27	35/31/29	37/32/30
Heat Exchanger				Copper tubes with louvered hydrophilie AL fine			
Air Filter				PP			
Refrigeration Control Device				EXV			
Protection Device				Fuse			

2.2 Slim Duct Type Indoor Unit

Model				GMV-ND07PL S/B-T(U)	GMV-ND09PL S/B-T(U)	GMV-ND12PL S/B-T(U)	GMV-ND14PL S/B-T(U)	GMV-ND18PL S/B-T(U)	GMV-ND24PL S/B-T(U)
Product Code				CM810N1720	CM810N1710	CM810N1700	CM810N1690	CM810N1680	CM810N1670
Cooling Capacity			Btu/h	7500	9500	12000	15000	18000	24000
			kW	2.2	2.8	3.6	4	5.6	7.1
Heating Capacity			Btu/h	9500	10500	13500	17000	20000	27000
			kW	2.8	3.2	4	4.5	6.3	8
Casing Finish				Galvanized Steel plate					
Dimensions (W×D×H)	Outline		mm	710×462×200	710×462×200	710×462×200	1010×462×200	1010×462×200	1310×462×200
			inch	27-15/16x18-3/16x7-14/16	27-15/16x18-3/16x7-14/16	27-15/16x18-3/16x7-14/16	39-12/16x18-3/16x7-14/16	39-12/16x18-3/16x7-14/16	51-9/16x18-3/16x7-14/16
	Packaging		mm	1025×570×285	1025×570×285	1025×570×285	1322×570×285	1625×570×285	1625×570×285
			inch	40-4/16x22-5/16x10-10/16	40-4/16x22-5/16x10-10/16	40-4/16x22-5/16x10-10/16	52-1/16x22-5/16x10-10/16	52-1/16x22-5/16x10-10/16	64x22-5/16x10-10/16
Net Weight			LBS	40.8	40.8	41.9	55.1	55.1	68.4
			kg	18.5	18.5	19	25	25	31
Gross Weight			LBS	51.8	51.8	52.9	68.4	68.4	82.7
			kg	23.5	23.5	24	31	31	37.5
Pipe Connection	Liquid Side		mm	Φ6.35	Φ6.35	Φ6.35	Φ6.35	Φ9.52	Φ9.52
			inch	Φ1/4	Φ1/4	Φ1/4	Φ1/4	Φ3/8	Φ3/8
	Gas Side		mm	Φ9.52	Φ9.52	Φ12.7	Φ12.7	Φ15.9	Φ15.9
			inch	Φ3/8	Φ3/8	Φ1/2	Φ1/2	Φ5/8	Φ5/8
	Drain Pipe		mm	Φ25	Φ25	Φ25	Φ25	Φ25	Φ25
			inch	Φ1	Φ1	Φ1	Φ1	Φ1	Φ1
Power Supply				1-phase 208/230V 60Hz					
Fan	Type * Quantity			Centrifugal*2	Centrifugal*2	Centrifugal*2	Centrifugal*3	Centrifugal*4	Centrifugal*4
	Driving Mechanism			Direct-driven					
	Motor Type			BLDC					
	Motor Power Input		W	30	30	30	30	60	80
	Motor Running Current		A	0.16	0.16	0.16	0.16	0.29	0.3
	Airflow Rate(H/M/L)		CFM	265/206/118	265/206/118	324/235/177	441/324/235	500/412/324	647/500/383
			m^3/h	450/350/200	450/350/200	550/400/300	750/550/400	850/700/550	1100/850/600
	External Static Pressure	Default	In.W.G	0.06	0.06	0.06	0.06	0.06	0.06
			Pa	15	15	15	15	15	15
		Range	In.W.G	0~0.12	0~0.12	0~0.12	0~0.12	0~0.12	0~0.12
			Pa	0~30	0~30	0~30	0~30	0~30	0~30
Sound Pressure Level(H/M/L)			dB(A)	30/25/22	30/25/22	31/27/25	33/29/27	35/31/29	37/32/30
Heat Exchanger				Fenestrate plain film --hydrophilic film					
Air Filter				PP					
Refrigeration Control Device				EXV					
Protection Device				Fuse					

2.3 Four-way Cassette Indoor Unit

Model			GMV-ND07T/A-T(U)	GMV-ND09T/A-T(U)	GMV-ND12T/A-T(U)	GMV-ND15T/A-T(U)	GMV-ND18T/A-T(U)
Product Code			CM500N0520	CM500N0530	CM500N0540	CM500N0670	CM500N0510
Cooling Capacity		Btu/h	7500	9500	12000	15000	18000
		kW	2.2	2.8	3.5	4.4	5.3
Heating Capacity		Btu/h	8500	10500	13500	17000	20000
		kW	2.5	3.1	4.0	5	5.9
Casing Finish			Galvanized Steel plate				
Dimensions (W×D×H)	Body Outline	mm	840×840×190	840×840×240	840×840×240	840×840×240	840×840×240
		inch	33×33×7-1/2	33×33×9-1/2	33×33×9-1/2	33×33×9-1/2	33×33×9-1/2
	Body Packaging	mm	963×963×272	963×963×325	963×963×325	963×963×325	963×963×325
		inch	37-15/16×37-15/16×10-11/16	37-15/16×37-15/16×12-13/16	37-15/16×37-15/16×12-13/16	37-15/16×37-15/16×12-13/16	37-15/16×37-15/16×12-13/16
	Panel Outline	mm	950×950×65	950×950×65	950×950×65	950×950×65	950×950×65
		inch	37-3/8×37-3/8×2-1/2	37-3/8×37-3/8×2-1/2	37-3/8×37-3/8×2-1/2	37-3/8×37-3/8×2-1/2	37-3/8×37-3/8×2-1/2
	Panel Packaging	mm	1033×1038×133	1033×1038×133	1033×1038×133	1033×1038×133	1033×1038×133
		inch	40-11/16×40-7/8×5-1/4	40-11/16×40-7/8×5-1/4	40-11/16×40-7/8×5-1/4	40-11/16×40-7/8×5-1/4	40-11/16×40-7/8×5-1/4
Net Weigh	Main Body	LBS	50	58	58	58	58
		kg	22.5	26.5	26.5	26.5	26.5
	Panel	LBS	15	15	15	15	15
		kg	7	7	7	7	7
Gross Weigh	Main Body	LBS	64	75	75	75	75
		kg	29	34	34	34	34
	Panel	LBS	24	24	24	24	24
		kg	11	11	11	11	11
Pipe Connections	Liquid Side	mm	Φ6.35	Φ6.35	Φ6.35	Φ6.35	Φ9.52
		inch	Φ1/4	Φ1/4	Φ1/4	Φ1/4	Φ3/8
	Gas Side	mm	Φ9.52	Φ9.52	Φ12.7	Φ12.7	Φ15.9
		inch	Φ3/8	Φ3/8	Φ1/2	Φ1/2	Φ5/8
	Drain Pipe	mm	Φ25	Φ25	Φ25	Φ25	Φ25
		inch	Φ1	Φ1	Φ1	Φ1	Φ1
Power Supply			1-phase 208/230V 60Hz				
Fan	Type * Quantity		Centrifugal*1	Centrifugal*1	Centrifugal*1	Centrifugal*1	Centrifugal*1
	Driving Mechanism		Direct-driven	Direct-driven	Direct-driven	Direct-driven	Direct-driven
	Motor Type		BLDC	BLDC	BLDC	BLDC	BLDC
	Motor Power Input	W	48	59	59	59	59
	Motor Running Current	A	0.3	0.5	0.5	0.5	0.5
	Airflow Rate(H/M/L)	CFM	440/385/325	590/530/440	590/530/440	590/530/440	590/530/440
		m^3/h	750/650/550	1000/900/750	1000/900/750	1000/900/750	1000/900/750
Sound Pressure Level(H/M/L)		dB(A)	36/34/31	37/35/32	37/35/32	37/35/32	37/35/32
Heat Exchanger			Fenestrate plain film --hydrophilic film				
Air Filter			PP	PP	PP	PP	PP
Insulation Material			Foamed polystyrene	Foamed polystyrene	Foamed polystyrene	Foamed polystyrene	Foamed polystyrene
Refrigeration Control Device			EXV	EXV	EXV	EXV	EXV
Protection Device			Fuse	Fuse	Fuse	Fuse	Fuse
Panel Name			TC01	TC01	TC01	TC01	TC01

Model			GMV-ND24T/A-T(U)	GMV-ND30T/A-T(U)	GMV-ND36T/A-T(U)	GMV-ND42T/A-T(U)	GMV-ND48T/A-T(U)
Product Code			CM500N0550	CM500N0560	CM500N0570	CM500N0580	CM500N0590
Cooling Capacity		Btu/h	24000	30000	36000	42000	48000
		kW	7	8.8	10.6	12.3	14.1
Heating Capacity		Btu/h	27000	34000	40000	47000	54000
		kW	7.9	10	11.7	13.8	15.8
Casing Finish			Galvanized Steel plate				
Dimensions (W×D×H)	Body Outline	mm	840×840×240	840×840×320	840×840×320	840×840×320	840×840×320
		inch	33×33×9-1/2	33×33×12-5/8	33×33×12-5/8	33×33×12-5/8	33×33×12-5/8
	Body Packaging	mm	963×963×325	963×963×409	963×963×409	963×963×409	963×963×409
		inch	37-15/16×37-15/16×12-13/16	37-15/16×37-15/16×16-1/8	37-15/16×37-15/16×16-1/8	37-15/16×37-15/16×16-1/8	37-15/16×37-15/16×16-1/8
	Panel Outline	mm	950×950×65	950×950×65	950×950×65	950×950×65	950×950×65
		inch	37-3/8×37-3/8×2-1/2	37-3/8×37-3/8×2-1/2	37-3/8×37-3/8×2-1/2	37-3/8×37-3/8×2-1/2	37-3/8×37-3/8×2-1/2
	Panel Packaging	mm	1033×1038×133	1033×1038×133	1033×1038×133	1033×1038×133	1033×1038×133
		inch	40-11/16×40-7/8×5-1/4	40-11/16×40-7/8×5-1/4	40-11/16×40-7/8×5-1/4	40-11/16×40-7/8×5-1/4	40-11/16×40-7/8×5-1/4
Net Weight	Main Body	LBS	58	72	72	72	72
		kg	26.5	32.5	32.5	32.5	32.5
	Panel	LBS	15	15	15	15	15
		kg	7	7	7	7	7
Gross Weight	Main Body	LBS	75	88	88	88	88
		kg	34	40	40	40	40
	Panel	LBS	24	24	24	24	24
		kg	11	11	11	11	11
Pipe Connections	Liquid Side	mm	Φ9.52	Φ9.52	Φ9.52	Φ9.52	Φ9.52
		inch	Φ3/8	Φ3/8	Φ3/8	Φ3/8	Φ3/8
	Gas Side	mm	Φ15.9	Φ15.9	Φ15.9	Φ15.9	Φ15.9
		inch	Φ5/8	Φ5/8	Φ5/8	Φ5/8	Φ5/8
	Drain Pipe	mm	Φ25	Φ25	Φ25	Φ25	Φ25
		inch	Φ1	Φ1	Φ1	Φ1	Φ1
Power Supply			1-phase 208/230V 60Hz				
Fan	Type * Quantity		Centrifugal*1	Centrifugal*1	Centrifugal*1	Centrifugal*1	Centrifugal*1
	Driving Mechanism		Direct-driven	Direct-driven	Direct-driven	Direct-driven	Direct-driven
	Motor Type		BLDC	BLDC	BLDC	BLDC	BLDC
	Motor Power Input	W	68	98	110	110	110
	Motor Running Current	A	0.5	0.8	0.9	0.9	0.9
	Airflow Rate (H/M/L)	CFM	695/590/470	885/795/650	1000/825/650	1095/885/680	1095/885/680
		m^3/h	1180/1000/800	1500/1350/1100	1700/1400/1100	1860/1500/1150	1860/1500/1150
Sound Pressure Level(H/M/L)		dB(A)	38/36/33	40/38/35	41/38/36	43/41/38	43/41/38
Heat Exchanger			Fenestrate plain film --hydrophilic film				
Air Filter			PP	PP	PP	PP	PP
Insulation Material			Foamed polystyrene	Foamed polystyrene	Foamed polystyrene	Foamed polystyrene	Foamed polystyrene
Refrigeration Control Device			EXV	EXV	EXV	EXV	EXV
Protection Device			Fuse	Fuse	Fuse	Fuse	Fuse
Panel Name			TC01	TC01	TC01	TC01	TC01

2.4 High Static Pressure Duct Type Indoor Unit

Model				GMV-ND18PH S/A-T(U)	GMV-ND24PH S/A-T(U)	GMV-ND30PH S/A-T(U)	GMV-ND36PH S/A-T(U)	GMV-ND42PH S/A-T(U)	GMV-ND48PH S/A-T(U)
Product Code				CM810N0140	CM810N0150	CM810N0160	CM810N0170	CM810N0180	CM810N0190
Cooling Capacity			Btu/h	18000	24000	30000	36000	42000	48000
			kW	5.3	7.0	8.8	10.6	12.3	14.1
Heating Capacity			Btu/h	20000	27000	34000	40000	47000	54000
			kW	5.9	7.9	10	11.7	13.8	15.8
Casing Finish				Galvanized Steel plate					
Dimensions (W×D×H)	Outline		mm	1271×558×268	1271×558×268	1229×775×290	1229×775×290	1229×775×290	1229×775×290
			inch	50×22×10-1/2	50×22×10-1/2	48-3/8×30-1/2×11-3/8	48-3/8×30-1/2×11-3/8	48-3/8×30-1/2×11-3/8	48-3/8×30-1/2×11-3/8
	Packaging		mm	1348×597×283	1348×597×283	1338×877×305	1338×877×305	1338×877×305	1338×877×305
			inch	53-1/16×23-3/8×11-1/8	53-1/16×23-3/8×11-1/8	52-11/16×34-1/2×12	52-11/16×34-1/2×12	52-11/16×34-1/2×12	52-11/16×34-1/2×12
Net Weight			LBS	77	77	104	104	104	104
			kg	35	35	47	47	47	47
Gross Weight			LBS	88	88	119	119	119	119
			kg	40	40	54	54	54	54
Pipe Connections	Liquid Side		mm	Φ9.52	Φ9.52	Φ9.52	Φ9.52	Φ9.52	Φ9.52
			inch	Φ3/8	Φ3/8	Φ3/8	Φ3/8	Φ3/8	Φ3/8
	Gas Side		mm	Φ15.9	Φ15.9	Φ15.9	Φ15.9	Φ15.9	Φ15.9
			inch	Φ5/8	Φ5/8	Φ5/8	Φ5/8	Φ5/8	Φ5/8
	Drain Pipe		mm	Φ25	Φ25	Φ25	Φ25	Φ25	Φ25
			inch	Φ1	Φ1	Φ1	Φ1	Φ1	Φ1
Power Supply				1-phase 208/230V 60Hz					
Fan	Type * Quantity			Centrifugal*2	Centrifugal*2	Centrifugal*2	Centrifugal*2	Centrifugal*2	Centrifugal*2
	Driving Mechanism			Direct-driven	Direct-driven	Direct-driven	Direct-driven	Direct-driven	Direct-driven
	Motor Type			BLDC	BLDC	BLDC	BLDC	BLDC	BLDC
	Motor Power Input		W	120	130	200	200	220	220
	Motor Running Current		A	0.9	0.9	1.4	1.4	1.6	1.6
	Airflow Rate(H/M/L)		CFM	590/470/355	650/530/410	1000/855/650	1000/855/650	1180/910/705	1180/1000/825
			m^3/h	1000/800/600	1100/900/700	1700/1450/1100	1700/1450/1100	2000/1550/1200	2000/1700/1400
	External Static Pressure	Default	In.W.G	0.28	0.28	0.28	0.28	0.28	0.28
			Pa	70	70	70	70	70	70
		Range	In.W.G	0～0.4	0～0.4	0～0.4	0～0.4	0～0.4	0～0.4
			Pa	0～100	0～100	0～100	0～100	0～100	0～100
Sound Pressure Level(H/M/L)			dB(A)	44/40/36	45/41/37	46/44/42	46/44/42	48/45/42	48/46/44
Heat Exchanger				Fenestrate plain film -- hydrophilic film					
Air Filter				PP	PP	PP	PP	PP	PP
Insulation Material				Foamed polystyrene					
Refrigeration Control Device				EXV	EXV	EXV	EXV	EXV	EXV
Protection Device				Fuse	Fuse	Fuse	Fuse	Fuse	Fuse

Model				GMV-ND72PH/A-T(U)	GMV-ND96PH/A-T(U)
Product Code				CM810N0280	CM810N0290
Cooling Capacity			Btu/h	69000	92000
			kW	20.2	27.0
Heating Capacity			Btu/h	77000	103000
			kW	22.6	30.2
Casing Finish				Galvanized Steel plate	
Dimensions (W×D×H)	Outline		mm	1483×791×385	1686×870×450
			inch	58-3/8×31-1/8×15-3/16	66-3/8×34-1/4×17-3/4
	Packaging		mm	1578×883×472	1788×988×580
			inch	62-1/8×34-3/4×18-5/8	70-3/8×38-7/8×22-7/8
Net Weight			LBS	181	232
			kg	82	105
Gross Weight			LBS	229	309
			kg	104	140
Pipe Connection	Liquid Side		mm	Φ9.52	Φ9.52
			inch	Φ3/8	Φ3/8
	Gas Side		mm	Φ19.05	Φ22.2
			inch	Φ3/4	Φ7/8
	Drain Pipe		mm	Φ25	Φ25
			inch	Φ1	Φ1
Power Supply				1-phase 208/230V 60Hz	
Fan	Type * Quantity			Centrifugal*2	Centrifugal*2
	Driving Mechanism			Direct-driven	
	Motor Type			BLDC	
	Motor Power Input		W	800	900
	Motor Running Current		A	5	6
	Airflow Rate(H/M/L)		CFM	2355/2120/1885	2590/2355/2120
			m^3/h	4000/3600/3200	4400/4000/3600
	External Static Pressure	Default	In.W.G	0.4	0.4
			Pa	100	100
		Range	In.W.G	0.2~0.8	0.2~0.8
			Pa	50~200	50~200
Sound Pressure Level(H/M/L)			dB(A)	54/52/49	55/52/50
Heat Exchanger				/	
Air Filter				PP	
Insulation Material				Foamed polystyrene	
Refrigeration Control Device				EXV	
Protection Device				Fuse	

2.5 Floor Ceiling Type Indoor Unit

Model			GMV-ND09ZD/A-T(U)	GMV-ND12ZD/A-T(U)	GMV-ND18ZD/A-T(U)	GMV-ND24ZD/A-T(U)
Product Code			CM600N0420	CM600N0430	CM600N0440	CM600N0450
Cooling Capacity		Btu/h	9500	12000	18000	24000
		kW	2.8	3.5	5.3	7.0
Heating Capacity		Btu/h	10500	13500	20000	27000
		kW	3.1	4.0	5.9	7.9
Casing Finish			Galvanized Steel plate			
Dimensions(W×D×H)	Outline	mm	1220×700×225	1220×700×225	1220×700×225	1420×700×245
		inch	48×27-9/16×8-7/8	48×27-9/16×8-7/8	48×27-9/16×8-7/8	55-7/8×27-9/16×9 5/8
	Packaging	mm	1343×823×315	1343×823×315	1343×823×315	1548×828×345
		inch	52-7/8×32-3/8×12-3/8	52-7/8×32-3/8×12-3/8	52-7/8×32-3/8×12-3/8	60-15/16×32-5/8×13-9/16
Net Weight		LBS	88	88	88	110
		kg	40	40	40	50
Gross Weight		LBS	108	108	108	128
		kg	49	49	49	58
Pipe Connection	Liquid Side	mm	Φ6.35	Φ6.35	Φ9.52	Φ9.52
		inch	Φ1/4	Φ1/4	Φ3/8	Φ3/8
	Gas Side	mm	Φ9.52	Φ12.7	Φ15.9	Φ15.9
		inch	Φ3/8	Φ1/2	Φ5/8	Φ5/8
	Drain Pipe	mm	Φ17	Φ17	Φ17	Φ17
		inch	Φ11/16	Φ11/16	Φ11/16	Φ11/16
Power Supply			1-phase 208/230V 60Hz		1-phase 208/230V 60Hz	
Fan	Type * Quantity		Centrifugal*4	Centrifugal*4	Centrifugal*4	Centrifugal*3
	Driving Mechanism		Direct-driven		Direct-driven	
	Motor Type		BLDC		BLDC	
	Motor Power Input	W	40	40	50	75
	Motor Running Current	A	0.5	0.5	0.5	0.55
	Airflow Rate(H/M/L)	CFM	380/345/305	380/345/305	560/510/410	825/675/640
		m^3/h	650/585/520	650/585/520	950/865/699	1400/1150/1085
Sound Pressure Level(H/M/L)		dB(A)	36/34/32	36/34/32	42/38/33	44/42/39
Heat Exchanger			/	/	/	/
Air Filter			PP	PP	PP	PP
Insulation Material			Foamed polystyrene			
Refrigeration Control Device			EXV	EXV	EXV	EXV
Protection Device			Fuse	Fuse	Fuse	Fuse

Model			GMV-ND30ZD/A-T(U)	GMV-ND36ZD/A-T(U)	GMV-ND42ZD/A-T(U)	GMV-ND48ZD/A-T(U)
Product Code			CM600N0460	CM600N0470	CM600N0480	CM600N0490
Cooling Capacity		Btu/h	30000	36000	42000	48000
		kW	8.8	10.6	12.3	14.1
Heating Capacity		Btu/h	33000	40000	47000	54000
		kW	10.0	11.7	13.8	15.8
Casing Finish			Galvanized Steel plate			
Dimensions(W×D×H)	Outline	mm	1420×700×245	1700×700×245	1700×700×245	1700×700×245
		inch	55-7/8×27-9/16×9-5/8	66-15/16×27-9/16×9-5/8	66-15/16×27-9/16×9-5/8	66-15/16×27-9/16×9-5/8
	Packaging	mm	1548×828×345	1828×828×345	1828×828×345	1828×828×345
		inch	60-15/16×32-5/8×13-9/16	71-15/16×32-5/8×13-9/16	71-15/16×32-5/8×13-9/16	71-15/16×32-5/8×13-9/16
Net Weight		LBS	110	132	132	132
		kg	50	60	60	60
Gross Weight		LBS	128	150	150	150
		kg	58	68	68	68
Pipe Connection	Liquid Side	mm	Φ9.52	Φ9.52	Φ9.52	Φ9.52
		inch	Φ3/8	Φ3/8	Φ3/8	Φ3/8
	Gas Side	mm	Φ15.9	Φ15.9	Φ15.9	Φ15.9
		inch	Φ5/8	Φ5/8	Φ5/8	Φ5/8
	Drain Pipe	mm	Φ17	Φ17	Φ17	Φ17
		inch	Φ11/16	Φ11/16	Φ11/16	Φ11/16
Power Supply			1-phase 208/230V 60Hz		1-phase 208/230V 60Hz	
Fan	Type * Quantity		Centrifugal*3	Centrifugal*4	Centrifugal*4	Centrifugal*4
	Driving Mechanism		Direct-driven		Direct-driven	
	Motor Type		BLDC		BLDC	
	Motor Power Input	W	140	160	160	160
	Motor Running Current	A	0.6	0.7	0.7	0.7
	Airflow Rate(H/M/L)	CFM	940/850/695	1180/904/755	1180/1065/855	1180/1065/855
		m^3/h	1600/1445/1183	2000/1600/1282	2000/1813/1452	2000/1813/1452
Sound Pressure Level(H/M/L)		dB(A)	50/47/43	51/47/42	52/49/45	52/49/45
Heat Exchanger			/	/	/	/
Air Filter			PP	PP	PP	PP
Insulation Material			Foamed polystyrene			
Refrigeration Control Device			EXV	EXV	EXV	EXV
Protection Device			Fuse	Fuse	Fuse	Fuse

2.6 Wall Mounted Type Indoor Unit

Model			GMV-N07G/A3A-D(U)	GMV-N09G/A3A-D(U)	GMV-N12G/A3A-D(U)	GMV-N18G/A3A-D(U)	GMV-N24G/A3A-D(U)
Product Code			CM100N1480	CM100N1490	CM100N1500	CM100N1510	CM100N1520
Cooling Capacity		Btu/h	7500	9500	12000	18000	24000
		kW	2.2	2.8	3.5	5.2	7
Heating Capacity		Btu/h	8500	11000	13500	20000	25500
		kW	2.5	3.2	4	5.8	7.5
Casing Finish			Galvanized Steel plate				
Dimensions (W×D×H)	Outline	mm	843×180×275	843×180×275	940×200×298	940×200×298	940×200×298
		inch	33 3/16×7 1/16×10 13/16	33 3/16×7 1/16×10 13/16	37×7 7/8×11 3/4	37×7 7/8×11 3/4	37×7 7/8×11 3/4
	Packaging	mm	973×258×370	973×258×370	1068×288×395	1068×288×395	1068×288×395
		inch	38 5/16×10 3/16×14 9/16	38 5/16×10 3/16×14 9/16	42 1/16×11 5/16×15 9/16	42 1/16×11 5/16×15 9/16	42 1/16×11 5/16×15 9/16
Net Weight		LBS	22.1	22.1	27.6	27.6	33.1
		kg	10	10	12.5	12.5	15
Gross Weight		LBS	27.6	27.6	34.2	34.2	40.8
		kg	12.5	12.5	15.5	15.5	18.5
Pipe Connections	Liquid Side	mm	Φ6.35	Φ6.35	Φ6.35	Φ6.35	Φ9.52
		inch	Φ1/4	Φ1/4	Φ1/4	Φ1/4	Φ3/8
	Gas Side	mm	Φ9.52	Φ9.52	Φ12.7	Φ12.7	Φ15.9
		inch	Φ3/8	Φ3/8	Φ1/2	Φ1/2	Φ5/8
	Drain Pipe	mm	Φ20	Φ20	Φ20	Φ20	Φ30
		inch	Φ4/5	Φ4/5	Φ4/5	Φ4/5	Φ1 1/6
Power supply			1-phase 208/230V 60Hz				
Fan	Type * Quantity		Cross-flow *1	Cross-flow *1	Cross-flow *1	Cross-flow *1	Cross-flow *1
	Driving Mechanism		Direct-driven				
	Motor Type		PG				
	Motor Power Input	W	50	50	60	60	70
	Motor Running Current	A	0.2	0.2	0.21	0.21	0.31
	Airflow Rate(H/M/L)	CFM	295/247/206	295/247/206	370/324/283	370/324/283	440/353/294
		m^3/h	500/420/350	500/420/350	630/550/480	630/550/480	750/600/500
Sound Pressure Level (H/M/L)		dB(A)	38/34/30	38/34/30	44/41/38	44/41/38	44/41/38
Heat Exchanger			Fenestrate plain film -- hydrophilic film				
Air Filter			PP+10%BCM+FP03				
Insulation Material			Foamed polystyrene				
Refrigeration Control Device			EXV				
Protection Device			Fuse				

Model			GMV-N07G/E3 A-D(U)	GMV-N09G/E3 A-D(U)	GMV-N12G/E3 A-D(U)	GMV-N18G/E3 A-D(U)	GMV-N24G/E3 A-D(U)
Product Code			CM100N2330	CM100N2340	CM100N2350	CM100N2360	CM100N2370
Cooling Capacity		Btu/h	7500	9500	12000	18000	24000
		kW	2.2	2.8	3.5	5.2	7
Heating Capacity		Btu/h	8500	11000	13500	20000	25500
		kW	2.5	3.2	4	5.8	7.5
Casing Finish			Galvanized Steel plate				
Dimensions (W×D×H)	Outline	mm	843×180×275	843×180×275	940×200×298	940×200×298	940×200×298
		inch	33 3/16×7 1/16×10 13/16	33 3/16×7 1/16×10 13/16	37×7 7/8×11 3/4	37×7 7/8×11 3/4	37×7 7/8×11 3/4
	Packaging	mm	973×258×370	973×258×370	1068×288×395	1068×288×395	1068×288×395
		inch	38 5/16×10 3/16×14 9/16	38 5/16×10 3/16×14 9/16	42 1/16×11 5/16×15 9/16	42 1/16×11 5/16×15 9/16	42 1/16×11 5/16×15 9/16
Net Weight		LBS	22.1	22.1	27.6	27.6	33.1
		kg	10	10	12.5	12.5	15
Gross Weight		LBS	27.6	27.6	34.2	34.2	40.8
		kg	12.5	12.5	15.5	15.5	18.5
Pipe Connections	Liquid Side	mm	Φ6.35	Φ6.35	Φ6.35	Φ6.35	Φ9.52
		inch	Φ1/4	Φ1/4	Φ1/4	Φ1/4	Φ3/8
	Gas Side	mm	Φ9.52	Φ9.52	Φ12.7	Φ12.7	Φ15.9
		inch	Φ3/8	Φ3/8	Φ1/2	Φ1/2	Φ5/8
	Drain Pipe	mm	Φ20	Φ20	Φ20	Φ20	Φ30
		inch	Φ4/5	Φ4/5	Φ4/5	Φ4/5	Φ1 1/6
Power supply			1-phase 208/230V 60Hz				
Fan	Type * Quantity		Cross-flow *1	Cross-flow *1	Cross-flow *1	Cross-flow *1	Cross-flow *1
	Driving Mechanism		Direct-driven				
	Motor Type		PG				
	Motor Power Input	W	50	50	60	60	70
	Motor Running Current	A	0.2	0.2	0.21	0.21	0.31
	Airflow Rate(H/M/L)	CFM	295/247/206	295/247/206	370/324/283	370/324/283	440/353/294
		m^3/h	500/420/350	500/420/350	630/550/480	630/550/480	750/600/500
Sound Pressure Level (H/M/L)		dB(A)	38/34/30	38/34/30	44/41/38	44/41/38	44/41/38
Heat Exchanger			Fenestrate plain film -- hydrophilic film				
Air Filter			PP+10%BCM+FP03				
Insulation Material			Foamed polystyrene				
Refrigeration Control Device			EXV				
Protection Device			Fuse				

Model			GMV-ND06G/B 4B-T(U)	GMV-ND07G/B 4B-T(U)	GMV-ND09G/B 4B-T(U)	GMV-ND12G/B 4B-T(U)	GMV-ND14G/B 4B-T(U)
Product Code			CM100N2950	CM100N2960	CM100N2970	CM100N2980	CM100N2990
Cooling Capacity		Btu/h	6000	7500	9500	12000	15000
		kW	1.8	2.2	2.8	3.5	4.4
Heating Capacity		Btu/h	6000	8500	10500	13500	17000
		kW	1.8	2.5	3.2	4.0	5.0
Casing Finish			Galvanized Steel plate				
Dimensions (W×D×H)	Outline	mm	845×209×289	845×209×289	845×209×289	845×209×289	970×300×224
		inch	33 1/4×8 1/4 ×11 3/8	33 1/4×8 1/4 ×11 3/8	33 1/4×8 1/4 ×11 3/8	33 1/4×8 1/4 ×11 3/8	38 3/16 ×11 13/16 ×8 13/16
	Packaging	mm	976×281×379	976×281×379	976×281×379	976×281×379	1096×383×320
		inch	38 7/16×11 1/16×14 15/16	38 7/16×11 1/16×14 15/16	38 7/16×11 1/16×14 15/16	38 7/16×11 1/16×14 15/16	43 1/8×15 1/16×12 5/8
Net Weight		LBS	23.5	23.5	23.5	23.5	27.5
		kg	10.5	10.5	10.5	10.5	12.5
Gross Weight		LBS	27.5	27.5	27.5	27.5	34.5
		kg	12.5	12.5	12.5	12.5	15.5
Pipe Connections	Liquid Side	mm	Φ6.35	Φ6.35	Φ6.35	Φ6.35	Φ6.35
		inch	Φ1/4	Φ1/4	Φ1/4	Φ1/4	Φ1/4
	Gas Side	mm	Φ9.52	Φ9.52	Φ9.52	Φ12.7	Φ12.7
		inch	Φ3/8	Φ3/8	Φ3/8	Φ1/2	Φ1/2
	Drain Pipe	mm	Φ20	Φ20	Φ20	Φ20	Φ20
		inch	Φ13/16	Φ13/16	Φ13/16	Φ13/16	Φ13/16
Power supply			1-phase 208/230V 60Hz				
Fan	Type * Quantity		Cross-flow*1	Cross-flow*1	Cross-flow*1	Cross-flow*1	Cross-flow*1
	Driving Mechanism		Direct-driven				
	Motor Type		BLDC				
	Motor Power Input	W	20	20	20	25	35
	Motor Running Current	A	0.1	0.1	0.1	0.12	0.17
	Airflow Rate(H/M/L)	CFM	294/259/177	294/259/177	294/259/177	371/271/188	500/341/294
		m^3/h	500/440/300	500/440/300	500/440/300	630/460/320	850/580/500
Sound Pressure Level(H/M/L)		dB(A)	35/33/30	35/33/30	35/33/30	38/35/31	43/40/37
Heat Exchanger			Fenestrate plain film -- hydrophilic film				
Air Filter			PP+PP MD10				
Insulation Material			Foamed polystyrene				
Refrigeration Control Device			EXV				
Protection Device			Fuse				

Model			GMV-ND18G/B4B-T(U)	GMV-ND24G/B4B-T(U)	GMV-ND30G/B4B-T(U)	GMV-ND36G/B4B-T(U)
Product Code			CM100N3000	CM100N3010	CM100N3020	CM100N3030
Cooling Capacity		Btu/h	18000	24000	30000	32500
		kW	5.2	7.0	8.8	9.5
Heating Capacity		Btu/h	20000	25500	34000	36000
		kW	5.8	7.5	10.0	10.5
Casing Finish			Galvanized Steel plate			
Dimensions (W×D×H)	Outline	mm	1078×325×246	1078×325×246	1350×258×326	1350×258×326
		inch	42 7/16×12 13/16 ×9 11/16	42 7/16×12 13/16 ×9 11/16	53 1/8×10 3/16 ×12 13/16	53 1/8×10 3/16 ×12 13/16
	Packaging	mm	1203×413×350	1203×413×350	1496×421×369	1496×421×369
		inch	47 3/8×16 1/4 ×13 3/4	47 3/8×16 1/4 ×13 3/4	58 7/8×16 9/16 ×14 1/2	58 7/8×16 9/16 ×14 1/2
Net Weight		LBS	35.5	35.5	44	44
		kg	16	16	20	20
Gross Weight		LBS	42	42	53	53
		kg	19	19	24	24
Pipe Connections	Liquid Side	mm	Φ9.52	Φ9.52	Φ9.52	Φ9.52
		inch	Φ3/8	Φ3/8	Φ3/8	Φ3/8
	Gas Side	mm	Φ15.9	Φ15.9	Φ15.9	Φ15.9
		inch	Φ5/8	Φ5/8	Φ5/8	Φ5/8
	Drain Pipe	mm	Φ20	Φ20	Φ20	Φ20
		inch	Φ13/16	Φ13/16	Φ13/16	Φ13/16
Power supply			1-phase 208/230V 60Hz			
Fan	Type * Quantity		Cross-flow*1	Cross-flow*1	Cross-flow*1	Cross-flow*1
	Driving Mechanism		Direct-driven			
	Motor Type		BLDC			
	Motor Power Input	W	50	65	80	100
	Motor Running Current	A	0.24	0.31	0.41	0.41
	Airflow Rate(H/M/L)	CFM	647/500/383	706/500/383	912/618/471	971/647/530
		m^3/h	1100/850/650	1200/850/650	1550/1050/800	1650/1100/900
Sound Pressure Level(H/M/L)		dB(A)	43/41/37	44/41/37	49/46/40	52/48/40
Heat Exchanger			Fenestrate plain film -- hydrophilic film			
Air Filter			PP+PP MD10			
Insulation Material			Foamed polystyrene			
Refrigeration Control Device			EXV			
Protection Device			Fuse			

2.7 Fresh Air Processing Unit

Model				GMV-NDX42P/A-T(U)	GMV-NDX48P/A-T(U)	GMV-NDX54P/A-T(U)
Product Code				CM810N1250	CM810N1030	CM810N1240
Cooling Capacity			Btu/h	42000	48000	54000
			kW	12.3	14.1	15.8
Heating Capacity*1			Btu/h	29000	34000	45000
			kW	8.5	10.0	13.2
Heating Capacity*2			Btu/h	36000	41000	52000
			kW	10.5	12.0	15.2
Casing Finish				Galvanized Steel plate		
Dimensions (W×D×H)	Outline		mm	1400×700×300	1400×700×300	1483×791×385
			inch	55-1/8×27-9/16×11-13/16	55-1/8×27-9/16×11-13/16	58-3/8×31-1/8×15-3/16
	Packaging		mm	1601×813×365	1601×813×365	1578×883×472
			inch	63×32×14-3/8	63×32×14-3/8	62-1/8×34-3/4×18-5/8
Net Weight			LBS	119	119	181
			kg	54	54	82
Gross Weight			LBS	134	134	229
			kg	61	61	104
Pipe Connection	Liquid Side		mm	Φ9.52	Φ9.52	Φ9.52
			inch	Φ3/8	Φ3/8	Φ3/8
	Gas Side		mm	Φ15.9	Φ15.9	Φ19.05
			inch	Φ5/8	Φ5/8	Φ3/4
	Drain Pipe		mm	Φ25	Φ25	Φ25
			inch	Φ1	Φ1	Φ1
Power Supply				1-phase 208/230V 60Hz		
Fan	Type * Quantity			Centrifugal*3	Centrifugal*3	Centrifugal*2
	Driving Mechanism			Direct-driven		
	Motor Type			BLDC		
	Motor Power Input		W	350	350	760
	Motor Running Current		A	2.0	2.0	4.3
	Airflow Rate(H/M/L)		CFM	706/589~1177	706/589~1177	1177/883~1766
			m^3/h	1200/1000~2000	1200/1000~2000	2000/1500~3000
	External Static Pressure	Default	In.W.G	0.60	0.60	0.80
			Pa	150	150	200
		Range	In.W.G	0.20~0.80	0.20~0.80	0.20~1.20
			Pa	50~200	50~200	50~300
Sound Pressure Level(H/M/L)			dB(A)	40~50	40~50	45~54
Heat Exchanger				/		
Air Filter				PP		
Insulation Material				Foamed polystyrene		
Refrigeration Control Device				EXV		
Protection Device				Fuse		

Model				GMV-NDX72P/A-T(U)	GMV-NDX96P/A-T(U)
Product Code				CM810N0480	CM810N0470
Cooling Capacity			Btu/h	72000	96000
			kW	21.1	28.1
Heating Capacity*1			Btu/h	55000	68000
			kW	16.1	20.0
Heating Capacity*2			Btu/h	68000	75000
			kW	20.0	22.0
Casing Finish				Galvanized Steel plate	
Dimensions (W×D×H)	Outline		mm	1483×791×385	1483×791×385
			inch	58-3/8×31-1/8×15-3/16	58-3/8×31-1/8×15-3/16
	Packaging		mm	1578×883×472	1578×883×472
			inch	62-1/8×34-3/4×18-5/8	62-1/8×34-3/4×18-5/8
Net Weight			LBS	181	181
			kg	82	82
Gross Weight			LBS	229	229
			kg	104	104
Pipe Connection	Liquid Side		mm	Φ9.52	Φ9.52
			inch	Φ3/8	Φ3/8
	Gas Side		mm	Φ19.05	Φ22.2
			inch	Φ3/4	Φ7/8
	Drain Pipe		mm	Φ25	Φ25
			inch	Φ1	Φ1
Power supply				1-phase 208/230V 60Hz	
Fan	Type * Quantity			Centrifugal*2	Centrifugal*2
	Driving Mechanism			Direct-driven	
	Motor Type			BLDC	
	Motor Power Input		W	750	750
	Motor Running Current		A	4.3	4.9
	Airflow Rate(H/M/L)		CFM	1177/883~1766	1471/1177~2060
			m^3/h	2000/1500~3000	2500/2000~3500
	External Static Pressure	Default	In.W.G	0.80	0.80
			Pa	200	200
		Range	In.W.G	0.20~1.20	0.20~1.20
			Pa	50~300	50~300
Sound Pressure Level(H/M/L)			dB(A)	45~54	47~54
Heat Exchanger				/	
Air Filter				PP	
Insulation Material				Foamed polystyrene	
Refrigeration Control Device				EXV	
Protection Device				Fuse	

NOTICE!

a. Rated cooling capacity test conditions: indoor 95.0°F DB/82.4°F WB, outdoor 95.0°F DB; connection pipe length: 24-5/8ft., without height difference between units. The default air outlet temperature of the unit is 64.4°F.

b. Rated heating capacity test conditions: *1. indoor 44.6°F DB, outdoor 44.6°F DB/42.8 °F WB, *2 indoor 32°F DB, outdoor 32°F DB/26.8°F WB, connection pipe length: 24-5/8ft., without height

difference between units. The default air outlet temperature of the unit is 71.6°F.

c. The Sound Pressure Level will change with the External Static Pressure.

d. This series can be matched with GMV5 only.

According to the different air volume requirements, there are two connection methods for the VRF fresh air series indoor unit:

（1）If air volume ≤1471CFM(2500m³/h), connect the normal indoor units by blow method, or connect the fixed outdoor unit as shown in (2).

Model of Indoor Unit	Model of Outdoor Unit
GMV-NDX42P/A-T(U)	1） The total capacity of connected fresh air series indoor units and conventional VRF indoor units must be within 50%~100% of the capacity of outdoor unit, among which, the total capacity of connected fresh air indoor units cannot exceed 30% of the capacity of outdoor unit. 2） Fresh air indoor units can operate independently. The total capacity of connected fresh air indoor units cannot exceed 50%~100% of the capacity of outdoor unit.
GMV-NDX48P/A-T(U)	
GMV-NDX54P/A-T(U)	
GMV-NDX72P/A-T(U)	
GMV-NDX96P/A-T(U)	

Note: When fresh air series indoor units and conventional VRF indoor units will be connected, please follow the capacity requirement strictly. The total capacity of connected fresh air indoor units cannot exceed 30% of the capacity of outdoor unit, while the total capacity of indoor units shall be within 50%~100% of the capacity of outdoor unit. Otherwise, the comfor will be affected or even the unit will be damaged.

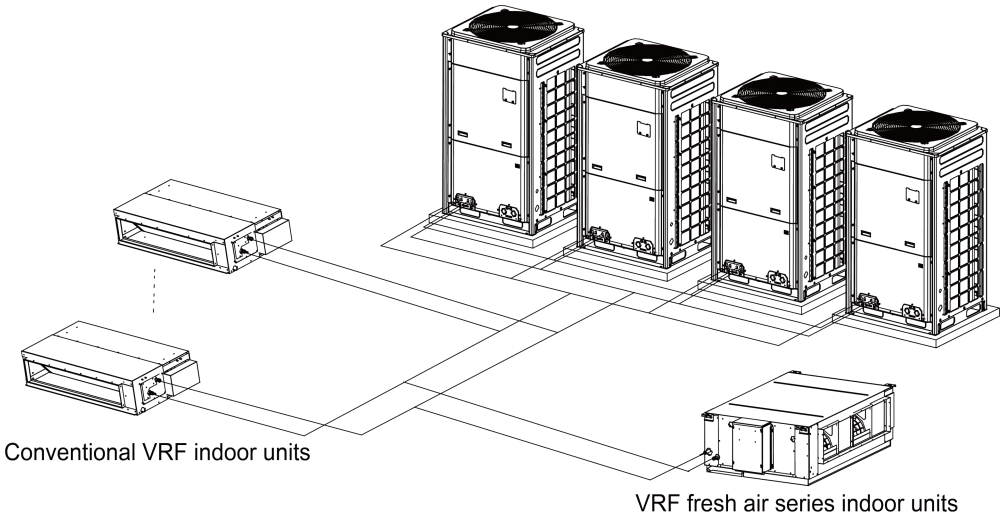

（2）If the selected air volume > 1471CFM(2500m³/h), it can only connect the fixed outdoor unit as below:

Model of Indoor Unit	Model of Outdoor Unit
GMV-NDX54P/A-T(U)	GMV-72WM/B-F(U)
GMV-NDX72P/A-T(U)	GMV-72WM/B-F(U)
GMV-NDX96P/A-T(U)	GMV-72WM/B-F(U)

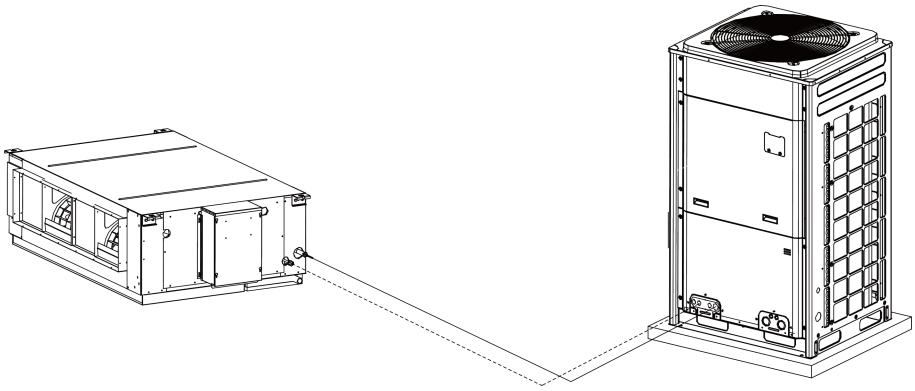

（3） For example:

1) If custom erselects GMV-NDX96P/A-T(U) model. After the unit is installed, the fan static pressure is 0.8 In.W.G (200Pa). The required air volume by the customer is 1766CFM(3000m³/h), the corresponding static notch on the curve diagram between air volume and static pressure is notch 09. Because the air volume is more than 1471CFM(2500m³/h), it needs to adopt the second fixed connection method, matching GMV-96WM/B-F(U).
2) If custom erselects GMV-NDX72P/A-T(U) model. After the unit is installed, the fan static pressure is 0.6 In.W.G (150Pa). The required air volume by the customer is 1354CFM(2300m³/h), the corresponding static notch on the curve diagram between air volume and static pressure is notch 05. Because the air volume is less than 1471CFM(2500m³/h), it can adopt first connection method or the second fixed connection method by matching GMV-72WM/B-F(U).

2.8 Console Type

Model			GMV-ND07C/A-T(U)	GMV-ND09C/A-T(U)	GMV-ND12C/A-T(U)	GMV-ND18C/A-T(U)
Product Code			CM400N0110	CM400N0120	CM400N0100	CM400N0130
Cooling Capacity		Btu/h	7500	9500	12000	18000
		kW	2.2	2.8	3.5	5.3
Heating Capacity		Btu/h	8500	11000	13500	20000
		kW	2.5	3.2	4	5.8
Casing Finish			Galvanized Steel plate			
Dimensions (W×D×H)	Outline	mm	700×215×600	700×215×600	700×215×600	700×215×600
		inch	27-5/9×8-1/2×23-5/8	27-5/9×8-1/2×23-5/8	27-5/9×8-1/2×23-5/8	27-5/9×8-1/2×23-5/8
	Packaging	mm	788×391×295	788×391×295	788×391×295	788×391×295
		inch	31×15-2/5×11-3/5	31×15-2/5×11-3/5	31×15-2/5×11-3/5	31×15-2/5×11-3/5
Net Weight		LBS	35	35	35	35
		kg	16	16	16	16
Gross Weight		LBS	42	42	42	42
		kg	19	19	19	19
Pipe Connections	Liquid Side	mm	Φ6.35	Φ6.35	Φ6.35	Φ6.35
		inch	Φ1/4	Φ1/4	Φ1/4	Φ1/4
	Gas Side	mm	Φ9.52	Φ9.52	Φ12.7	Φ12.7
		inch	Φ3/8	Φ3/8	Φ1/2	Φ1/2
	Drain Pipe	mm	Φ28	Φ28	Φ28	Φ28
		inch	Φ1-1/9	Φ1-1/9	Φ1-1/9	Φ1-1/9
Power supply			1-phase 208/230V 60Hz			

Model			GMV-ND07C/A-T(U)	GMV-ND09C/A-T(U)	GMV-ND12C/A-T(U)	GMV-ND18C/A-T(U)
Fan	Type * Quantity		Centrifugal*1	Centrifugal*1	Centrifugal*1	Centrifugal*1
	Driving Mechanism		Direct-driven			
	Motor Type		BLDC			
	Motor Power Input	W	38	38	38	38
	Motor Running Current	A	0.4	0.4	0.4	0.4
	Airflow Rate(H/M/L)	CFM	235	235	282	400
		m^3/h	400	400	480	680
Sound Pressure Level(H/M/L)		dB(A)	38	38	40	46
Heat Exchanger			Fenestrate plain film -- hydrophilic film			
Air Filter			PP			
Insulation Material			Foamed polystyrene			
Refrigeration Control Device			EXV			
Protection Device			Fuse			

2.9 Two-way Cassette Type

Model			GMV-ND09TS/A-T(U)	GMV-ND12TS/A-T(U)	GMV-ND15TS/A-T(U)	GMV-ND18TS/A-T(U)	GMV-ND24TS/A-T(U)
Product Code			CM500N0890	CM500N0900	CM500N0910	CM500N0920	CM500N0930
Cooling Capacity		Btu/h	9500	12000	15000	18000	24000
		kW	2.8	3.5	4.4	5.3	7
Heating Capacity		Btu/h	10500	13500	17000	20000	27000
		kW	3.1	4.0	5	5.9	7.9
Casing Finish			Galvanized Steel plate				
Dimensions (W×D×H)	Body Outline	mm	1200×520×340	1200×520×340	1200×520×340	1200×520×340	1200×520×340
		inch	47-1/4×20-1/2×13-3/8	47-1/4×20-1/2×13-3/8	47-1/4×20-1/2×13-3/8	47-1/4×20-1/2×13-3/8	47-1/4×20-1/2×13-3/8
	Body Packaging	mm	1523×658×430	1523×658×430	1523×658×430	1523×658×430	1523×658×430
		inch	60×26×17	60×26×17	60×26×17	60×26×17	60×26×17
	Panel Outline	mm	1443×630×33	1443×630×33	1443×630×33	1443×630×33	1443×630×33
		inch	55-3/4×24-13/16×1-1/4	55-3/4×24-13/16×1-1/4	55-3/4×24-13/16×1-1/4	55-3/4×24-13/16×1-1/4	55-3/4×24-13/16×1-1/4
	Panel Packaging	mm	1578×658×120	1578×658×120	1578×658×120	1578×658×120	1578×658×120
		inch	62-1/8×30-1/4×4-11/16	62-1/8×30-1/4×4-11/16	62-1/8×30-1/4×4-11/16	62-1/8×30-1/4×4-11/16	62-1/8×30-1/4×4-11/16
Net Weight	Body	LBS	95	95	95	95	101
		kg	43	43	43	43	46
	Panel	LBS	15	15	15	15	15
		kg	7	7	7	7	7
Gross Weight	Body	LBS	119	119	119	119	123
		kg	54	54	54	54	56
	Panel	LBS	24	24	24	24	24
		kg	11	11	11	11	11
Pipe Connection	Liquid Side	mm	Φ6.35	Φ6.35	Φ6.35	Φ9.52	Φ9.52
		inch	Φ1/4	Φ1/4	Φ1/4	Φ3/8	Φ3/8
	Gas Side	mm	Φ9.52	Φ12.7	Φ12.7	Φ15.9	Φ15.9
		inch	Φ3/8	Φ1/2	Φ1/2	Φ5/8	Φ5/8
	Drain Pipe	mm	Φ25	Φ25	Φ25	Φ25	Φ25
		inch	Φ1	Φ1	Φ1	Φ1	Φ1
Power Supply			1-phase 208/230V 60Hz		1-phase 208/230V 60Hz		

Model			GMV-ND09TS/A-T(U)	GMV-ND12TS/A-T(U)	GMV-ND15TS/A-T(U)	GMV-ND18TS/A-T(U)	GMV-ND24TS/A-T(U)
Fan	Type * Quantity		Centrifugal*3	Centrifugal*3	Centrifugal*3	Centrifugal*3	Centrifugal*3
	Driving Mechanism		Direct-driven				
	Motor Type		BLDC				
	Motor Power Input	W	55	55	55	55	91
	Motor Running Current	A	0.4	0.4	0.4	0.4	0.7
	Airflow Rate(H/M/L)	CFM	490/355/312	490/355/312	490/355/312	490/355/312	650/483/448
		m^3/h	830/600/530	830/600/530	830/600/530	830/600/530	1100/820/760
Sound Pressure Level(H/M/L)		dB(A)	35/33/31	35/33/31	35/33/31	35/33/31	39/37/35
Heat Exchanger			/				
Air Filter			PP				
Insulation Material			Foamed polystyrene				
Refrigeration Control Device			EXV				
Protection Device			Fuse				
Panel Name			TE01	TE01	TE01	TE01	TE01

Model			GMV-ND09TS/B-T(U)	GMV-ND12TS/B-T(U)	GMV-ND15TS/B-T(U)	GMV-ND18TS/B-T(U)	GMV-ND24TS/B-T(U)
Product Code			CM500N1890	CM500N1900	CM500N1840	CM500N1880	CM500N1830
Cooling Capacity		Btu/h	9500	12000	15000	18000	24000
		kW	2.8	3.5	4.4	5.3	7.0
Heating Capacity		Btu/h	10500	13500	17000	20000	27000
		kW	3.1	4.0	5.0	5.9	7.9
Dimensions (W×D×H)	Body Outline	mm	790×630×280	790×630×280	790×630×280	790×630×280	790×630×280
		inch	31-1/8×24-13/16×11	31-1/8×24-13/16×11	31-1/8×24-13/16×11	31-1/8×24-13/16×11	31-1/8×24-13/16×11
	Body Packaging	mm	1033×740×365	1033×740×365	1033×740×365	1033×740×365	1033×740×365
		inch	40-5/8×29-1/8×14-3/8	40-5/8×29-1/8×14-3/8	40-5/8×29-1/8×14-3/8	40-5/8×29-1/8×14-3/8	40-5/8×29-1/8×14-3/8
	Panel Outline	mm	1100×710×28	1100×710×28	1100×710×28	1100×710×28	1100×710×28
		inch	43-5/16×28×1-3/32	43-5/16×28×1-3/32	43-5/16×28×1-3/32	43-5/16×28×1-3/32	43-5/16×28×1-3/32
	Panel Packaging	mm	1230×843×130	1230×843×130	1230×843×130	1230×843×130	1230×843×130
		inch	48-7/16×33-3/16×5-1/8	48-7/16×33-3/16×5-1/8	48-7/16×33-3/16×5-1/8	48-7/16×33-3/16×5-1/8	48-7/16×33-3/16×5-1/8
Net Weight	Body	LBS	56.2	56.2	56.2	57.3	57.3
		kg	25.5	25.5	25.5	26	26
	Panel	LBS	13.2	13.2	13.2	13.2	13.2
		kg	6	6	6	6	6
Gross Weight	Body	LBS	73.9	73.9	73.9	76.1	76.1
		kg	33.5	33.5	33.5	34.5	34.5
	Panel	LBS	23.2	23.2	23.2	23.2	23.2
		kg	10.5	10.5	10.5	10.5	10.5
Pipe Connection	Liquid Side	mm	Φ6.35	Φ6.35	Φ6.35	Φ9.52	Φ9.52
		inch	Φ1/4	Φ1/4	Φ1/4	Φ3/8	Φ3/8
	Gas Side	mm	Φ9.52	Φ12.7	Φ12.7	Φ15.9	Φ15.9
		inch	Φ3/8	Φ1/2	Φ1/2	Φ5/8	Φ5/8
	Drain Pipe	mm	Φ25	Φ25	Φ25	Φ25	Φ25
		inch	Φ1	Φ1	Φ1	Φ1	Φ1
Power Supply			1-phase 208/230V 60Hz		1-phase 208/230V 60Hz		
Fan	Type * Quantity		Centrifugal*1	Centrifugal*1	Centrifugal*1	Centrifugal*1	Centrifugal*1
	Driving Mechanism		Direct-driven				
	Motor Type		BLDC				
	Motor Power Input	W	20	20	30	30	55
	Motor Running Current	A	0.25	0.25	0.3	0.3	0.49
	Airflow Rate(H/M/L)	CFM	395/363/302	395/363/302	421/363/302	450/417/398	480/438/388
		m^3/h	671/616/513	671/616/513	715/616/513	764/709/676	816/745/660
Sound Pressure Level(H/M/L)		dB(A)	33/31/28	33/31/28	35/31/28	37/35/32	39/37/34

Model	GMV-ND09TS/B-T(U)	GMV-ND12TS/B-T(U)	GMV-ND15TS/B-T(U)	GMV-ND18TS/B-T(U)	GMV-ND24TS/B-T(U)
Heat Exchanger	/				
Air Filter	PP				
Insulation Material	Foamed polystyrene				
Refrigeration Control Device	EXV				
Protection Device	Fuse				
Panel Name	TE03	TE03	TE03	TE03	TE03

2.10 Compact Four-way Cassette Type

Model			GMV-ND07T/B-T(U)	GMV-ND09T/B-T(U)	GMV-ND12T/B-T(U)	GMV-ND15T/B-T(U)	GMV-ND18T/B-T(U)
Product Code			CM500N0940	CM500N0950	CM500N0960	CM500N0970	CM500N0980
Cooling Capacity		Btu/h	7500	9500	12000	15000	18000
		kW	2.2	2.8	3.5	4.4	5.3
Heating Capacity		Btu/h	8500	10500	13500	17000	20000
		kW	2.5	3.1	4.0	5.0	5.9
Casing Finish			Galvanized Steel plate				
Dimensions (W×D×H)	Body Outline	mm	596×596×240	596×596×240	596×596×240	596×596×240	596×596×240
		inch	23-1/2×23-1/2×9-1/2	23-1/2×23-1/2×9-1/2	23-1/2×23-1/2×9-1/2	23-1/2×23-1/2×9-1/2	23-1/2×23-1/2×9-1/2
	Body Packaging	mm	778×738×300	778×738×300	778×738×300	778×738×300	778×738×300
		inch	30-5/8×29×11-3/4	30-5/8×29×11-3/4	30-5/8×29×11-3/4	30-5/8×29×11-3/4	30-5/8×29×11-3/4
	Panel Outline	mm	670×670×50	670×670×50	670×670×50	670×670×50	670×670×50
		inch	26-3/8×26-3/8×2	26-3/8×26-3/8×2	26-3/8×26-3/8×2	26-3/8×26-3/8×2	26-3/8×26-3/8×2
	Panel Packaging	mm	763×763×105	763×763×105	763×763×105	763×763×105	763×763×105
		inch	30×30×4-1/8	30×30×4-1/8	30×30×4-1/8	30×30×4-1/8	30×30×4-1/8
Net Weigh	Main Body	LBS	49	49	49	49	49
		kg	22	22	22	22	22
	Panel	LBS	8	8	8	8	8
		kg	3.5	3.5	3.5	3.5	3.5
Gross Weigh	Main Body	LBS	60	60	60	60	60
		kg	27	27	27	27	27
	Panel	LBS	11	11	11	11	11
		kg	5	5	5	5	5
Pipe Connections	Liquid Side	mm	Φ6.35	Φ6.35	Φ6.35	Φ6.35	Φ9.52
		inch	Φ1/4	Φ1/4	Φ1/4	Φ1/4	Φ3/8
	Gas Side	mm	Φ9.52	Φ9.52	Φ12.7	Φ12.7	Φ15.9
		inch	Φ3/8	Φ3/8	Φ1/2	Φ1/2	Φ5/8
	Drain Pipe	mm	Φ25	Φ25	Φ25	Φ25	Φ25
		inch	Φ1	Φ1	Φ1	Φ1	Φ1
Power Supply			1-phase 208/230V 60Hz				
Fan	Type * Quantity		Centrifugal*1	Centrifugal*1	Centrifugal*1	Centrifugal*1	Centrifugal*1
	Driving Mechanism		Direct-driven	Direct-driven	Direct-driven	Direct-driven	Direct-driven
	Motor Type		BLDC	BLDC	BLDC	BLDC	BLDC
	Motor Power Input	W	35	35	35	45	45
	Motor Running Current	A	0.4	0.4	0.4	0.5	0.5
	Airflow Rate (H/M/L)	CFM	355/295/235	355/295/235	355/295/235	410/355/283	410/355/283
		m^3/h	600/500/400	600/500/400	600/500/400	700/600/480	700/600/480

Model		GMV-ND07T/B-T(U)	GMV-ND09T/B-T(U)	GMV-ND12T/B-T(U)	GMV-ND15T/B-T(U)	GMV-ND18T/B-T(U)
Sound Pressure Level(H/M/L)	dB(A)	38/36/33	38/36/33	38/36/33	45/42/36	45/42/36
Heat Exchanger		Fenestrate plain film --hydrophilic film				
Air Filter		PP	PP	PP	PP	PP
Insulation Material		Foamed polystyrene	Foamed polystyrene	Foamed polystyrene	Foamed polystyrene	Foamed polystyrene
Refrigeration Control Device		EXV	EXV	EXV	EXV	EXV
Protection Device		Fuse	Fuse	Fuse	Fuse	Fuse
Panel Name		TC03	TC03	TC03	TC03	TC03

2.11 Super High Static Pressure Duct Type Indoor Unit

GMV-ND**PHS/B-T(U)

Model				GMV-ND07PHS/B-T(U)	GMV-ND09PHS/B-T(U)	GMV-ND12PHS/B-T(U)	GMV-ND15PHS/B-T(U)
Product Code				CM810N0830	CM810N0790	CM810N0800	CM810N0770
Cooling Capacity			Btu/h	7500	9500	12000	15000
			kW	2.2	2.8	3.5	4.4
Heating Capacity			Btu/h	8500	10500	13500	17000
			kW	2.5	3.1	4	5
Casing Finish				Galvanized Steel plate			
Dimensions (W×D×H)	Outline		mm	700x700×300	700x700×300	1000×700×300	1000×700×300
			inch	27-9/16×27-9/16×11-13/16	27-9/16×27-9/16×11-13/16	39-3/8×27-9/16×11-13/16	39-3/8×27-9/16×11-13/16
	Packaging		mm	897×808×360	897×808×360	1205×813×360	1205×813×360
			inch	35-5/16x32x14-3/16	35-5/16x32x14-3/16	47-7/16×32x14-3/16	47-7/16×32x14-3/16
Net Weight			LBS	73	73	94	94
			kg	33	33	42.6	42.6
Gross Weight			LBS	86	86	108	108
			kg	39	39	49	49
Pipe Connections	Liquid Side		mm	Φ6.35	Φ6.35	Φ6.35	Φ6.35
			inch	Φ1/4	Φ1/4	Φ1/4	Φ1/4
	Gas Side		mm	Φ9.52	Φ9.52	Φ12.7	Φ12.7
			inch	Φ3/8	Φ3/8	Φ1/2	Φ1/2
	Drain Pipe		mm	Φ25	Φ25	Φ25	Φ25
			inch	Φ1	Φ1	Φ1	Φ1
Power Supply				1-phase 208/230V 60Hz			
Fan	Type * Quantity			Centrifugal*1	Centrifugal*1	Centrifugal*2	Centrifugal*2
	Driving Mechanism			Direct-driven	Direct-driven	Direct-driven	Direct-driven
	Motor Type			BLDC	BLDC	BLDC	BLDC
	Motor Power Input		W	/	/	/	/
	Motor Running Current		A	0.3	0.3	0.3	0.3
	Airflow Rate(H/M/L)		CFM	324/282/235	324/282/235	353/294/247	500/412/353
			m^3/h	550/480/400	550/480/400	600/500/420	850/700/600
	External Static Pressure	Default	In.W.G	0.24	0.24	0.24	0.24
			Pa	60	60	60	60
		Range	In.W.G	0～0.6	0～0.6	0～0.6	0～0.6
			Pa	0～150	0～150	0～150	0～150
Sound Pressure Level(H/M/L)			dB(A)	35/33/31	35/33/31	36/34/32	40/37/34

Model	GMV-ND07PHS/B-T(U)	GMV-ND09PHS/B-T(U)	GMV-ND12PHS/B-T(U)	GMV-ND15PHS/B-T(U)
Heat Exchanger	Fenestrate plain film -- hydrophilic film			
Air Filter	PP	PP	PP	PP
Insulation Material	Foamed polystyrene			
Refrigeration Control Device	EXV	EXV	EXV	EXV
Protection Device	Fuse	Fuse	Fuse	Fuse

Model			GMV-ND18PHS/B-T(U)	GMV-ND22PHS/B-T(U)	GMV-ND24PHS/B-T(U)	GMV-ND30PHS/B-T(U)
Product Code			CM810N0810	CM810N0720	CM810N0730	CM810N0780
Cooling Capacity		Btu/h	18000	22000	24000	30000
		kW	5.3	6.4	7	8.8
Heating Capacity		Btu/h	20000	24000	27000	34000
		kW	5.9	7	7.9	10
Casing Finish			Galvanized Steel plate			
Dimensions (W×D×H)	Outline	mm	1000×700×300	1000×700×300	1000×700×300	1400×700×300
		inch	39-3/8×27-9/16×11-13/16	39-3/8×27-9/16×11-13/16	39-3/8×27-9/16×11-13/16	55-1/8×27-9/16×11-13/16
	Packaging	mm	1205×813×360	1205×813×360	1205×813×360	1601×813×365
		inch	47-7/16×32x14-3/16	47-7/16×32x14-3/16	47-7/16×32x14-3/16	63-1/16x32x14-3/8
Net Weight		LBS	94	94	94	121
		kg	42.6	42.6	42.6	55
Gross Weight		LBS	108	108	108	137
		kg	49	49	49	62
Pipe Connections	Liquid Side	mm	Φ9.52	Φ9.52	Φ9.52	Φ9.52
		inch	Φ3/8	Φ3/8	Φ3/8	Φ3/8
	Gas Side	mm	Φ15.9	Φ15.9	Φ15.9	Φ15.9
		inch	Φ5/8	Φ5/8	Φ5/8	Φ5/8
	Drain Pipe	mm	Φ25	Φ25	Φ25	Φ25
		inch	Φ1	Φ1	Φ1	Φ1
Power Supply			1-phase 208/230V 60Hz			
Fan	Type * Quantity		Centrifugal*2	Centrifugal*2	Centrifugal*2	Centrifugal*3
	Driving Mechanism		Direct-driven	Direct-driven	Direct-driven	Direct-driven
	Motor Type		BLDC	BLDC	BLDC	BLDC
	Motor Power Input	W	/	/	/	/
	Motor Running Current	A	0.7	0.7	0.9	1.2
	Airflow Rate(H/M/L)	CFM	589/471/412	589/471/412	736/618/559	1059/853/736
		m^3/h	1000/800/700	1000/800/700	1250/1050/950	1800/1450/1250
	External Static Pressure – Default	In.W.G	0.36	0.36	0.36	0.36
		Pa	90	90	90	90
	External Static Pressure – Range	In.W.G	0～0.8	0～0.8	0～0.8	0～0.8
		Pa	0～200	0～200	0～200	0～200
Sound Pressure Level(H/M/L)		dB(A)	42/38/35	42/38/35	43/39/35	44/41/38
Heat Exchanger			Fenestrate plain film -- hydrophilic film			
Air Filter			PP	PP	PP	PP
Insulation Material			Foamed polystyrene			
Refrigeration Control Device			EXV	EXV	EXV	EXV
Protection Device			Fuse	Fuse	Fuse	Fuse

Model			GMV-ND36PHS/B-T(U)	GMV-ND42PHS/B-T(U)	GMV-ND48PHS/B-T(U)	GMV-ND54PHS/B-T(U)
Product Code			CM810N0740	CM810N0750	CM810N0820	CM810N0760
Cooling Capacity		Btu/h	36000	42000	48000	54000
		kW	10.6	12.3	14.1	15.8
Heating Capacity		Btu/h	40000	47000	54000	60000
		kW	11.7	13.8	15	17.6
Casing Finish			Galvanized Steel plate			
Dimensions (W×D×H)	Outline	mm	1400×700×300	1400×700×300	1400×700×300	1400×700×300
		inch	55-1/8×27-9/16×11-13/16	55-1/8×27-9/16×11-13/16	55-1/8×27-9/16×11-13/16	55-1/8×27-9/16×11-13/16
	Packaging	mm	1601×813×365	1601×813×365	1678×808×365	1678×808×365
		inch	63-1/16×32×14-3/8	63-1/16×32×14-3/8	66-1/16×32×14-3/8	66-1/16×32×14-3/8
Net Weight		LBS	121	121	128	128
		kg	55	55	58	58
Gross Weight		LBS	137	137	148	148
		kg	62	62	67	67
Pipe Connections	Liquid Side	mm	Φ9.52	Φ9.52	Φ9.52	Φ9.52
		inch	Φ3/8	Φ3/8	Φ3/8	Φ3/8
	Gas Side	mm	Φ15.9	Φ15.9	Φ15.9	Φ19.05
		inch	Φ5/8	Φ5/8	Φ5/8	Φ3/4
	Drain Pipe	mm	Φ25	Φ25	Φ25	Φ25
		inch	Φ1	Φ1	Φ1	Φ1
Power Supply			1-phase 208/230V 60Hz			
Fan	Type * Quantity		Centrifugal*3	Centrifugal*3	Centrifugal*3	Centrifugal*3
	Driving Mechanism		Direct-driven	Direct-driven	Direct-driven	Direct-driven
	Motor Type		BLDC	BLDC	BLDC	BLDC
	Motor Power Input	W	/	/	/	/
	Motor Running Current	A	1.2	1.2	1.3	1.3
	Airflow Rate(H/M/L)	CFM	1177/942/824	1177/942/824	1383/1118/971	1471/1177/1030
		m^3/h	2000/1600/1400	2000/1600/1400	2350/1900/1650	2500/2000/1750
	External Static Pressure – Default	In.W.G	0.36	0.36	0.36	0.36
		Pa	90	90	90	90
	External Static Pressure – Range	In.W.G	0～0.8	0～0.8	0～0.8	0～0.8
		Pa	0～200	0～200	0～200	0～200
Sound Pressure Level(H/M/L)		dB(A)	45/42/40	45/42/40	46/43/41	47/44/42
Heat Exchanger			Fenestrate plain film -- hydrophilic film			
Air Filter			PP	PP	PP	PP
Insulation Material			Foamed polystyrene			
Refrigeration Control Device			EXV	EXV	EXV	EXV
Protection Device			Fuse	Fuse	Fuse	Fuse

GMV-ND**PH/B-T(U)

Model			GMV-ND72PH/B-T(U)	GMV-ND96PH/B-T(U)
Product Code			CM810N1600	CM810N1590
Cooling Capacity		Btu/h	72000	96000
		kW	21.1	28.1
Heating Capacity		Btu/h	81000	108000
		kW	23.7	31.7
Casing Finish			Galvanized Steel plate	
Dimensions (W×D×H)	Outline	mm	1240×1040×470	1240×1040×470
		inch	48-3/4×41×18-1/2	48-3/4×41×18-1/2
	Packaging	mm	1520×1153×605	1520×1153×605
		inch	59-7/8×45-3/8×23-7/8	59-7/8×45-3/8×23-7/8

Model				GMV-ND72PH/B-T(U)	GMV-ND96PH/B-T(U)
Net Weight			LBS	223	236
			kg	101	107
Gross Weight			LBS	331	340
			kg	150	154
Pipe Connections	Liquid Side		mm	Φ9.52	Φ9.52
			inch	Φ3/8	Φ3/8
	Gas Side		mm	Φ19.05	Φ22.2
			inch	Φ3/4	Φ7/8
	Drain Pipe		mm	Φ25	Φ25
			inch	Φ1	Φ1
Power Supply				1-phase 208/230V 60Hz	
Fan	Type * Quantity			Centrifugal*2	Centrifugal*2
	Driving Mechanism			Direct-driven	Direct-driven
	Motor Type			BLDC	BLDC
	Motor Power Input		W	750	750
	Motor Running Current		A	4.5	5.4
	Airflow Rate (H/M/L)		CFM	2355/1885/1650	2530/2120/1885
			m^3/h	4000/3200/2800	4300/3600/3200
	External Static Pressure	Default	In.W.G	0.52	0.6
			Pa	130	150
		Range	In.W.G	0.2~0.98	0.2~1.1
			Pa	50~245	50~275
Sound Pressure Level(H/M/L)			dB(A)	46/45/44	48/46/45
Heat Exchanger				Fenestrate plain film -- hydrophilic film	
Air Filter				PP	PP
Insulation Material				Foamed polystyrene	
Refrigeration Control Device				EXV	EXV
Protection Device				Fuse	Fuse

GMV-ND**PHS/D-T(U)

Model			GMV-ND07PHS/D-T(U)	GMV-ND09PHS/D-T(U)	GMV-ND12PHS/D-T(U)	GMV-ND15PHS/D-T(U)
Cooling Capacity		Btu/h	7500	9500	12000	15000
		kW	2.2	2.8	3.5	4.4
Heating Capacity		Btu/h	8500	10500	13500	17000
		kW	2.5	3.1	4	5
Casing Finish			Galvanized Steel plate			
Dimensions (W×D×H)	Outline	mm	700×700×300	700×700×300	1000×700×300	1000×700×300
		inch	27-9/16×27-9/16×11-13/16	27-9/16×27-9/16×11-13/16	39-3/8×27-9/16×11-13/16	39-3/8×27-9/16×11-13/16
	Packaging	mm	897×808×360	897×808×360	1205×813×360	1205×813×360
		inch	35-5/16×31-13/16×14-3/16	35-5/16×31-13/16×14-3/16	47-7/16×32×14-3/16	47-7/16×32×14-3/16
Net Weight		LBS	72	72	95	95
		kg	32.5	32.5	43	43
Gross Weight		LBS	84	84	109	109
		kg	38	38	49.5	49.5
Pipe Connections	Liquid Side	mm	Φ6.35	Φ6.35	Φ6.35	Φ6.35
		inch	1/4	1/4	1/4	1/4
	Gas Side	mm	Φ9.52	Φ9.52	Φ12.7	Φ12.7
		inch	3/8	3/8	1/2	1/2
	Drain Pipe	mm	Φ25	Φ25	Φ25	Φ25
		inch	Φ1	Φ1	Φ1	Φ1
Power Supply			1-phase 208/230V 60Hz			

Model				GMV-ND07PHS/D-T(U)	GMV-ND09PHS/D-T(U)	GMV-ND12PHS/D-T(U)	GMV-ND15PHS/D-T(U)
Fan	Type × Quantity			Centrifugal×1	Centrifugal×1	Centrifugal×2	Centrifugal×2
	Driving Mechanism			Direct-driven	Direct-driven	Direct-driven	Direct-driven
	Motor Type			BLDC	BLDC	BLDC	BLDC
	Airflow Rate (H/M/L)		CFM	350/295/245	350/295/245	590/470/410	590/470/410
			m³/h	600/500/420	600/500/420	1000/800/700	1000/800/700
	External Static Pressure	Default	In.W.G	0.24	0.24	0.36	0.36
			Pa	60	60	90	90
		Range	In.W.G	0~0.6	0~0.6	0~0.8	0~0.8
			Pa	0~150	0~150	0~200	0~200
Sound Pressure Level(H/M/L)			dB(A)	35/32/29	35/32/29	37/35/33	37/35/33
Heat Exchanger				Fenestrate plain film -- hydrophilic film			
Air Filter				PP	PP	PP	PP
Insulation Material				Foamed polystyrene			
Refrigeration Control Device				EXV	EXV	EXV	EXV
Protection Device				Fuse	Fuse	Fuse	Fuse

Model				GMV-ND18PHS/D-T(U)	GMV-ND22PHS/D-T(U)	GMV-ND24PHS/D-T(U)	GMV-ND30PHS/D-T(U)
Cooling Capacity			Btu/h	18000	22000	24000	30000
			kW	5.3	6.4	7	8.8
Heating Capacity			Btu/h	20000	24000	27000	34000
			kW	5.9	7	7.9	10
Casing Finish				Galvanized Steel plate			
Dimensions (W×D×H)	Outline		mm	1000×700×300	1000×700×300	1000×700×300	1400×700×300
			inch	39-3/8×27-9/16 ×11-13/16	39-3/8×27-9/16 ×11-13/16	39-3/8×27-9/16 ×11-13/16	55-1/8X27-9/16X11-13/16
	Packaging		mm	1205×813×360	1205×813×360	1205×813×360	1601×813×365
			inch	47-7/16×32 ×14-3/16	47-7/16×32 ×14-3/16	47-7/16×32 ×14-3/16	63-1/16×32×14-3/8
Net Weight			LBS	95	95	95	128
			kg	43	43	43	58
Gross Weight			LBS	109	109	109	143
			kg	49.5	49.5	49.5	65
Pipe Connections	Liquid Side		mm	Φ9.52	Φ9.52	Φ9.52	Φ9.52
			inch	3/8	3/8	3/8	3/8
	Gas Side		mm	Φ15.9	Φ15.9	Φ15.9	Φ15.9
			inch	5/8	5/8	5/8	5/8
	Drain Pipe		mm	Φ25	Φ25	Φ25	Φ25
			inch	Φ1	Φ1	Φ1	Φ1
Power Supply				1-phase 208/230V 60Hz			
Fan	Type × Quantity			Centrifugal×2	Centrifugal×2	Centrifugal×2	Centrifugal×3
	Driving Mechanism			Direct-driven	Direct-driven	Direct-driven	Direct-driven
	Motor Type			BLDC	BLDC	BLDC	BLDC
	Airflow Rate (H/M/L)		CFM	590/470/410	735/620/560	735/620/560	1175/940/825
			m³/h	1000/800/700	1250/1050/950	1250/1050/950	2000/1600/1400
	External Static Pressure	Default	In.W.G	0.36	0.36	0.36	0.36
			Pa	90	90	90	90
		Range	In.W.G	0~0.8	0~0.8	0~0.8	0~0.8
			Pa	0~200	0~200	0~200	0~200
Sound Pressure Level(H/M/L)			dB(A)	37/35/33	38/36/34	38/36/34	42/39/36
Heat Exchanger				Fenestrate plain film -- hydrophilic film			
Air Filter				PP	PP	PP	PP

Model	GMV-ND18PHS/D-T(U)	GMV-ND22PHS/D-T(U)	GMV-ND24PHS/D-T(U)	GMV-ND30PHS/D-T(U)
Insulation Material	Foamed polystyrene			
Refrigeration Control Device	EXV	EXV	EXV	EXV
Protection Device	Fuse	Fuse	Fuse	Fuse

Model				GMV-ND36PHS/D-T(U)	GMV-ND42PHS/D-T(U)	GMV-ND48PHS/D-T(U)	GMV-ND54PHS/D-T(U)
Cooling Capacity			Btu/h	36000	42000	48000	54000
			kW	10.6	12.3	14.1	15.8
Heating Capacity			Btu/h	40000	47000	54000	60000
			kW	11.7	13.8	15	17.6
Casing Finish				Galvanized Steel plate			
Dimensions (W×D×H)	Outline		mm	1400×700×300	1400×700×300	1400×700×300	1400×700×300
			inch	55-1/8×27-9/16 ×11-13/16	55-1/8×27-9/16 ×11-13/16	55-1/8×27-9/16 ×11-13/16	55-1/8×27-9/16 ×11-13/16
	Packaging		mm	1601×813×365	1601×813×365	1601×813×365	1601×813×365
			inch	63-1/16×32×14-3/8	63-1/16×32×14-3/8	63-1/16×32×14-3/8	63-1/16×32×14-3/8
Net Weight			LBS	128	128	130	130
			kg	58	58	59	59
Gross Weight			LBS	143	143	146	146
			kg	65	65	66	66
Pipe Connections	Liquid Side		mm	Φ9.52	Φ9.52	Φ9.52	Φ9.52
			inch	3/8	3/8	3/8	3/8
	Gas Side		mm	Φ15.9	Φ15.9	Φ15.9	Φ19.05
			inch	5/8	5/8	5/8	3/4
	Drain Pipe		mm	Φ25	Φ25	Φ25	Φ25
			inch	Φ1	Φ1	Φ1	Φ1
Power Supply				1-phase 208/230V 60Hz			
Fan	Type × Quantity			Centrifugal×3	Centrifugal×3	Centrifugal×3	Centrifugal×3
	Driving Mechanism			Direct-driven	Direct-driven	Direct-driven	Direct-driven
	Motor Type			BLDC	BLDC	BLDC	BLDC
	Airflow Rate (H/M/L)		CFM	1175/940/825	1175/940/825	1470/1175/1030	1470/1175/1030
			m³/h	2000/1600/1400	2000/1600/1400	2500/2000/1750	2500/2000/1750
	External Static Pressure	Default	In.W.G	0.36	0.36	0.36	0.36
			Pa	90	90	90	90
		Range	In.W.G	0~0.8	0~0.8	0~0.8	0~0.8
			Pa	0~200	0~200	0~200	0~200
Sound Pressure Level(H/M/L)			dB(A)	42/39/36	42/39/36	45/42/39	45/42/39
Heat Exchanger				Fenestrate plain film -- hydrophilic film			
Air Filter				PP	PP	PP	PP
Insulation Material				Foamed polystyrene			
Refrigeration Control Device				EXV	EXV	EXV	EXV
Protection Device				Fuse	Fuse	Fuse	Fuse

2.12 Air Handler Type Indoor Unit

Model				GMV-ND09A/A-T(U)	GMV-ND12A/A-T(U)	GMV-ND18A/A-T(U)	GMV-ND24A/A-T(U)	GMV-ND30A/A-T(U)
Product Code				CM810N1900	CM810N1910	CM810N1890	CM810N0660	CM810N0670
Cooling Capacity			Btu/h	9500	12000	18000	24000	30000
			kW	2.8	3.5	5.23	7.0	8.8
Heating Capacity			Btu/h	10500	13500	20000	27000	34000
			kW	3.1	4.0	5.9	7.9	10.0
Casing Finish				Galvanized Steel plate				
Dimensions (W×D×H)	Outline		mm	460x540×1105	460x540×1105	460x540×1105	460x540×1105	460x540×1105
			inch	18-1/8×21-1/4×43-1/2	18-1/8×21-1/4×43-1/2	18-1/8×21-1/4×43-1/2	18-1/8×21-1/4×43-1/2	18-1/8×21-1/4×43-1/2
	Packaging		mm	517×620×1170	517×620×1170	517×620×1170	517×620×1170	517×620×1170
			inch	20-3/8×24-3/8×46-1/8	20-3/8×24-3/8×46-1/8	20-3/8×24-3/8×46-1/8	20-3/8×24-3/8×46-1/8	20-3/8×24-3/8×46-1/8
Net Weight			LBS	119	119	124	124	124
			kg	54	54	56	56	56
Gross Weight			LBS	128	128	135	135	135
			kg	58	58	61	61	61
Pipe Connections	Liquid Side		mm	Φ6.35	Φ6.35	Φ9.52	Φ9.52	Φ9.52
			inch	Φ1/4	Φ1/4	Φ3/8	Φ3/8	Φ3/8
	Gas Side		mm	Φ9.52	Φ12.7	Φ15.9	Φ15.9	Φ15.9
			inch	Φ3/8	Φ1/2	Φ5/8	Φ5/8	Φ5/8
	Drain Pipe		/	G1	G1	G1	G1	G1
Power Supply				1-phase 208/230V 60Hz				
Fan	Type * Quantity			Centrifugal*1	Centrifugal*1	Centrifugal*1	Centrifugal*1	Centrifugal*1
	Driving Mechanism			Direct-driven	Direct-driven	Direct-driven	Direct-driven	Direct-driven
	Motor Type			BLDC	BLDC	BLDC	BLDC	BLDC
	Motor Power Input		W	55.0	55.0	122.5	122.5	183.7
	Motor Running Current		A	1.1	1.1	1.1	1.1	1.4
	Airflow Rate (H/M/L)		CFM	559/383/324	559/383/324	824/706/559	824/706/559	882/706/559
			m^3/h	950/650/550	950/650/550	1400/1200/950	1400/1200/950	1500/1200/950
	External Static Pressure	Default	In.W.G	0.1	0.1	0.1	0.1	0.15
			Pa	25	25	25	25	37
		Range	In.W.G	0～0.3	0～0.3	0～0.3	0～0.3	0～0.3
			Pa	0～75	0～75	0～75	0～75	0～75
Sound Pressure Level(H/M/L)			dB(A)	34/32/30	34/32/30	45/43/41	45/43/41	46/44/42
Heat Exchanger				Fenestrate plain film -- hydrophilic film				
Air Filter				PP	PP	PP	PP	PP
Insulation Material				Foamed polystyrene				
Refrigeration Control Device				EXV	EXV	EXV	EXV	EXV
Protection Device				Fuse	Fuse	Fuse	Fuse	Fuse

Model		GMV-ND36A/A-T(U)	GMV-ND42A/A-T(U)	GMV-ND48A/A-T(U)	GMV-ND54A/A-T(U)
Product Code		CM810N0700	CM810N0690	CM810N0680	CM810N0710
Cooling Capacity	Btu/h	36000	42000	48000	54000
	kW	10.6	12.3	14.1	15.8
Heating Capacity	Btu/h	40000	47000	54000	60000
	kW	11.7	13.8	15.8	17.6

Model				GMV-ND36A/A-T(U)	GMV-ND42A/A-T(U)	GMV-ND48A/A-T(U)	GMV-ND54A/A-T(U)
Casing Finish				Galvanized Steel plate			
Dimensions (W×D×H)	Outline		mm	540×540×1224	540×540×1224	630×540×1224	630×540×1224
			inch	21-1/4×21-1/4×48-1/4	21-1/4×21-1/4×48-1/4	24-7/8×21-1/4×48-1/4	24-7/8×21-1/4×48-1/4
	Packaging		mm	597×620×1289	597×620×1289	687×621×1295	687×621×1295
			inch	23-1/2×24-3/8×50-3/4	23-1/2×24-3/8×50-3/4	27×24-1/2×51	27×24-1/2×51
Net Weight			LBS	148	148	179	179
			kg	67	67	81	81
Gross Weight			LBS	159	159	192	192
			kg	72	72	87	87
Pipe Connections	Liquid Side		mm	Φ9.52	Φ9.52	Φ9.52	Φ9.52
			inch	Φ3/8	Φ3/8	Φ3/8	Φ3/8
	Gas Side		mm	Φ15.9	Φ15.9	Φ15.9	Φ15.9
			inch	Φ5/8	Φ5/8	Φ5/8	Φ5/8
	Drain Pipe		/	G1	G1	G1	G1
Power Supply				1-phase 208/230V 60Hz			
Fan	Type * Quantity			Centrifugal*1	Centrifugal*1	Centrifugal*1	Centrifugal*1
	Driving Mechanism			Direct-driven	Direct-driven	Direct-driven	Direct-driven
	Motor Type			BLDC	BLDC	BLDC	BLDC
	Motor Power Input		W	294	367.5	428.7	441
	Motor Running Current		A	2.6	2.7	3.4	3.5
	Airflow Rate (H/M/L)		CFM	1353/1176/1000	1441/1265/1118	1618/1500/1353	1676/1559/1353
			m^3/h	2300/2000/1700	2450/2150/1900	2750/2550/2300	2850/2650/2300
	External Static Pressure	Default	In.W.G	0.15	0.15	0.2	0.2
			Pa	37	37	50	50
		Range	In.W.G	0～0.4	0～0.4	0～0.5	0～0.5
			Pa	0～100	0～100	0～125	0～125
Sound Pressure Level(H/M/L)			dB(A)	49/47/45	50/48/46	51/49/47	52/50/48
Heat Exchanger				Fenestrate plain film -- hydrophilic film			
Air Filter				PP	PP	PP	PP
Insulation Material				Foamed polystyrene			
Refrigeration Control Device				EXV	EXV	EXV	EXV
Protection Device				Fuse	Fuse	Fuse	Fuse

Model			GMV-ND09A/B-T(U)	GMV-ND12A/B-T(U)	GMV-ND18A/B-T(U)	GMV-ND24A/B-T(U)	GMV-ND30A/B-T(U)
Product Code			CM810N2340	CM810N2280	CM810N2300	CM810N2350	CM810N2290
Cooling Capacity		Btu/h	9500	12000	18000	24000	30000
		kW	2.8	3.5	5.3	7.0	8.8
Heating Capacity		Btu/h	10500	13500	20000	27000	34000
		kW	3.1	4.0	5.9	7.9	10.0
Casing Finish			Galvanized Steel plate				
Dimensions (W×D×H)	Outline	mm	460x540×1105	460x540×1105	460x540×1105	460x540×1105	460x540×1105
		inch	18-1/8×21-1/4×43-1/2	18-1/8×21-1/4×43-1/2	18-1/8×21-1/4×43-1/2	18-1/8×21-1/4×43-1/2	18-1/8×21-1/4×43-1/2
	Packaging	mm	517×620×1170	517×620×1170	517×620×1170	517×620×1170	517×620×1170
		inch	20-3/8×24-3/8×46-1/8	20-3/8×24-3/8×46-1/8	20-3/8×24-3/8×46-1/8	20-3/8×24-3/8×46-1/8	20-3/8×24-3/8×46-1/8

Model				GMV-ND09A/B-T(U)	GMV-ND12A/B-T(U)	GMV-ND18A/B-T(U)	GMV-ND24A/B-T(U)	GMV-ND30A/B-T(U)
Net Weight			LBS	119	119	121	123	123
			kg	54	54	55	56	56
Gross Weight			LBS	130	130	132	134	134
			kg	59	59	60	61	61
Pipe Connections	Liquid Side		mm	Φ6.35	Φ6.35	Φ9.52	Φ9.52	Φ9.52
			inch	Φ1/4	Φ1/4	Φ3/8	Φ3/8	Φ3/8
	Gas Side		mm	Φ9.52	Φ12.7	Φ15.9	Φ15.9	Φ15.9
			inch	Φ3/8	Φ1/2	Φ5/8	Φ5/8	Φ5/8
	Drain Pipe		/	G1	G1	G1	G1	G1
Power Supply				1-phase 208/230V 60Hz				
Fan	Type * Quantity			Centrifugal*1	Centrifugal*1	Centrifugal*1	Centrifugal*1	Centrifugal*1
	Driving Mechanism			Direct-driven	Direct-driven	Direct-driven	Direct-driven	Direct-driven
	Motor Type			BLDC	BLDC	BLDC	BLDC	BLDC
	Motor Power Input		W	190	190	210	300	300
	Motor Running Current		A	1.8	1.8	2.0	2.8	2.8
	Airflow Rate(H/M/L)		CFM	400/340/280	420/360/300	650/520/300	880/800/690	910/820/710
			m^3/h	680/578/476	714/612/510	1105/884/510	1495/1359/1172	1546/1393/1206
	External Static Pressure	Default	In.W.G	0.2	0.2	0.2	0.2	0.2
			Pa	50	50	50	50	50
		Range	In.W.G	0～1	0～1	0～1	0～1	0～1
			Pa	0～250	0～250	0～250	0～250	0～250
Sound Pressure Level(H/M/L)			dB(A)	36/34/33	36/34/33	39/36/33	43/41/40	44/42/40
Heat Exchanger				Fenestrate plain film -- hydrophilic film				
Air Filter				Aluminum alloy	Aluminum alloy	Aluminum alloy	Aluminum alloy	Aluminum alloy
Insulation Material				Foamed polystyrene				
Refrigeration Control Device				EXV	EXV	EXV	EXV	EXV
Protection Device				Fuse	Fuse	Fuse	Fuse	Fuse

Model			GMV-ND36A/B-T(U)	GMV-ND42A/B-T(U)	GMV-ND48A/B-T(U)	GMV-ND54A/B-T(U)	GMV-ND60A/B-T(U)
Product Code			CM810N2330	CM810N2260	CM810N2310	CM810N2320	CM810N2270
Cooling Capacity		Btu/h	36000	42000	48000	54000	60000
		kW	10.6	12.3	14.1	15.8	17.6
Heating Capacity		Btu/h	40000	47000	54000	60000	66000
		kW	11.7	13.8	15.8	17.6	19.3
Casing Finish			Galvanized Steel plate				
Dimensions (W×D×H)	Outline	mm	540x540×1224	540×540×1224	630×540×1448	630×540×1448	630×540×1448
		inch	21-1/4×21-1/4 ×48-1/4	21-1/4×21-1/4 ×48-1/4	24-3/4×21-1/4 ×57	24-3/4×21-1/4 ×57	24-3/4×21-1/4 ×57
	Packaging	mm	660×603×1295	660×603×1295	693×660×1523	693×660×1523	693×660×1523
		inch	26×23-3/4 ×51	26×23-3/4 ×51	27-1/4×26 ×59-15/16	27-1/4×26 ×59-15/16	27-1/4×26 ×59-15/16
Net Weight		LBS	159	159	198	198	198
		kg	72	72	90	90	90
Gross Weight		LBS	170	170	216	216	216
		kg	77	77	98	98	98

Model				GMV-ND36A/B-T(U)	GMV-ND42A/B-T(U)	GMV-ND48A/B-T(U)	GMV-ND54A/B-T(U)	GMV-ND60A/B-T(U)
Pipe Connections	Liquid Side		mm	Φ9.52	Φ9.52	Φ9.52	Φ9.52	Φ9.52
			inch	Φ3/8	Φ3/8	Φ3/8	Φ3/8	Φ3/8
	Gas Side		mm	Φ15.9	Φ15.9	Φ15.9	Φ19.05	Φ19.05
			inch	Φ5/8	Φ5/8	Φ5/8	Φ3/4	Φ3/4
	Drain Pipe		/	G1	G1	G1	G1	G1
Power Supply				1-phase 208/230V 60Hz				
Fan	Type * Quantity			Centrifugal*1	Centrifugal*1	Centrifugal*1	Centrifugal*1	Centrifugal*1
	Driving Mechanism			Direct-driven	Direct-driven	Direct-driven	Direct-driven	Direct-driven
	Motor Type			BLDC	BLDC	BLDC	BLDC	BLDC
	Motor Power Input		W	430	430	770	770	770
	Motor Running Current		A	4.0	4.0	6.9	6.9	6.9
	Airflow Rate(H/M/L)		CFM	1230/1100/970	1260/1120/1000	1800/1600/1500	1800/1600/1500	1820/1650/1530
			m^3/h	2090/1869/1648	2141/1903/1699	3059/2719/2549	3059/2719/2549	3093/2804/2600
	External Static Pressure	Default	In.W.G	0.2	0.2	0.2	0.2	0.2
			Pa	50	50	50	50	50
		Range	In.W.G	0～1	0～1	0～1	0～1	0～1
			Pa	0～250	0～250	0～250	0～250	0～250
Sound Pressure Level(H/M/L)			dB(A)	45/43/42	46/44/43	50/49/48	50/49/48	51/50/49
Heat Exchanger				Fenestrate plain film -- hydrophilic film				
Air Filter				Aluminum alloy	Aluminum alloy	Aluminum alloy	Aluminum alloy	Aluminum alloy
Insulation Material				Foamed polystyrene				
Refrigeration Control Device				EXV	EXV	EXV	EXV	EXV
Protection Device				Fuse	Fuse	Fuse	Fuse	Fuse

2.13 AHU-KIT Type

Model			GMV-N12U/A-T(U)		GMV-N24U/A-T(U)			GMV-N48U/A-T(U)		
Defaulted Capacity of ex-factory	Capacity		12		24			48		
	Cooling	kW	3.5		7.0			14.1		
	Cooling	kBtu/h	12.0		24.0			48.0		
	Heating	kW	4.0		7.9			15.8		
	Heating	kBtu/h	13.5		27.0			54.0		
Adjustable Capacity	Capacity		9	12	15	18	24	30	36	48
	Cooling	kW	2.6	3.5	4.4	5.3	7.0	8.8	10.55	14.1
	Cooling	kBtu/h	9.5	12.0	15.0	18.0	24.0	30.0	36.0	48.0
	Heating	kW	3.1	4.0	5.0	5.9	7.9	10.0	11.72	15.8
	Heating	kBtu/h	10.5	13.5	17.0	20.0	27.0	34.0	40.0	54.0
Power Input		W	5.0		5.0			5.0		
Power Supply		—	208/230V ~60Hz		208/230V ~60Hz			208/230V ~60Hz		
Diameter of Connection Pipe	AHU-KIT (ex-factory pipe size)	mm	Φ6.35	Φ6.35	Φ9.52	Φ9.52	Φ9.52	Φ9.52	Φ9.52	Φ9.52
		inch	Φ1/4	Φ1/4	Φ3/8	Φ3/8	Φ3/8	Φ3/8	Φ3/8	Φ3/8
	Air Handling Unit, Liquid Pipe	mm	Φ6.35	Φ6.35	Φ6.35	Φ9.52	Φ9.52	Φ9.52	Φ9.52	Φ9.52
		inch	Φ1/4	Φ1/4	Φ1/4	Φ3/8	Φ3/8	Φ3/8	Φ3/8	Φ3/8
	Air Handling Unit, Gas Pipe	mm	Φ9.52	Φ12.7	Φ12.7	Φ15.9	Φ15.9	Φ15.9	Φ15.9	Φ15.9
		inch	Φ3/8	Φ1/2	Φ1/2	Φ5/8	Φ5/8	Φ5/8	Φ5/8	Φ5/8
	Connection Method		Brazing Connection		Brazing Connection			Brazing Connection		

Model			GMV-N12U/A-T(U)	GMV-N24U/A-T(U)	GMV-N48U/A-T(U)
Outline Dimensions (W×D×H)	EXV Box	mm	203×326×85	203×326×85	203×326×85
		inch	8×12-7/8×3-3/8	8×12-7/8×3-3/8	8×12-7/8×3-3/8
	Control Box	mm	334×284×111	334×284×111	334×284×111
		inch	13-1/8×11-1/8×4-3/8	13-1/8×11-1/8×4-3/8	13-1/8×11-1/8×4-3/8
Net Weight	kg		9.5	9.5	9.5
	LBS		21	21	21

Model			GMV-N96U/A-T(U)				GMV-N192U/A-T(U)		
Defaulted Capacity of ex-factory	Capacity		96				192		
	Cooling	kW	28.1				56.3		
	Cooling	kBtu/h	96.0				192		
	Heating	kW	31.7				63.3		
	Heating	kBtu/h	108.0				216		
Adjustable Capacity	Capacity		72	96	120	144	168	192	288
	Cooling	kW	21.1	28.1	35.2	42.2	49.2	56.3	84.4
	Cooling	kBtu/h	72	96	120	144	168	192	288
	Heating	kW	23.7	31.7	39.6	47.5	55.4	63.3	95.0
	Heating	kBtu/h	81	108	135	162	189	216	324
Power Input		W	5.0				5.0		
Power Supply		—	208/230V ~60Hz				208/230V ~60Hz		
Diameter of Connection Pipe	AHU-KIT (ex-factory pipe size)	mm	Φ9.52	Φ9.52	Φ9.52	Φ9.52	Φ15.9	Φ15.9	Φ15.9
		inch	Φ3/8	Φ3/8	Φ3/8	Φ3/8	Φ5/8	Φ5/8	Φ5/8
	Air Handling Unit, Liquid Pipe	mm	Φ9.52	Φ9.52	Φ12.7	Φ12.7	Φ15.9	Φ15.9	Φ19.05
		inch	Φ3/8	Φ3/8	Φ1/2	Φ1/2	Φ5/8	Φ5/8	Φ3/4
	Air Handling Unit, Gas Pipe	mm	Φ19.05	Φ22.2	Φ28.6	Φ28.6	Φ28.6	Φ28.6	Φ34.9
		inch	Φ3/4	Φ7/8	Φ1-1/8	Φ1-1/8	Φ1-1/8	Φ1-1/8	Φ1-3/8
	Connection Method		Brazing Connection				Brazing Connection		
Outline Dimensions (W×D×H)	EXV Box	mm	203×326×85				246×500×120		
		inch	8×12-7/8×3-3/8				9-5/8×19-5/8×4-3/4		
	Control Box	mm	334×284×111				334×284×111		
		inch	13-1/8×11-1/8×4-3/8				13-1/8×11-1/8×4-3/8		
Net Weight	kg		9.5				13		
	LBS		21				28		

Model				GMV-N48U/A-T(U)+GMV-N192U/A-T(U)
Capacity				48+288
Cooling	kW			98.48
Cooling	kBtu/h			336
Heating	kW			110.79
Heating	kBtu/h			378
Power Input	W			5.0+5.0
Power Supply	—			208/230V ~60Hz
Diameter of Connection Pipe	Air Handling Unit	Liquid Pipe	mm	Φ19.05
			inch	Φ3/4
		Gas Pipe	mm	Φ34.9
			inch	Φ1-3/8

Model			GMV-N48U/A-T(U)+GMV-N192U/A-T(U)
Outline dimensions (W×D×H)	Electronic Expansion Valve Box	mm	(203×326×85)+(246×500×120)
		inch	(8×12-7/8×3-3/8)+(9-5/8×19-5/8×4-3/4)
	Control Box	mm	(334×284×111)×2
		inch	(13-1/8×11-1/8×4-3/8)×2
Net Weight		kg	9.5+13
		LBS	21+28

Model			GMV-N12U/C-T(U)			GMV-N24U/C-T(U)			GMV-N48U/C-T(U)		
Defaulted Capacity of ex-factory	Capacity		12			24			48		
	Cooling	kW	3.5			7.0			14.1		
	Cooling	kBtu/h	12.0			24.0			48.0		
	Heating	kW	4.0			7.9			15.8		
	Heating	kBtu/h	13.5			27.0			54.0		
Adjustable Capacity	Capacity		9	12	15	18	24	30	36	48	60
	Cooling	kW	2.6	3.5	4.4	5.3	7.0	8.8	10.6	14.1	17.6
	Cooling	kBtu/h	9.5	12.0	15.0	18.0	24.0	30.0	36.0	48.0	60.0
	Heating	kW	3.1	4.0	5.0	5.9	7.9	10.0	11.7	15.8	19.7
	Heating	kBtu/h	10.5	13.5	17.0	20.0	27.0	34.0	40.0	54.0	67.0
Power Input		W	8.0			8.0			8.0		
Power Supply		—	208/230V ~60Hz			208/230V ~60Hz			208/230V ~60Hz		
Diameter of Connection Pipe	AHU-KIT (ex-factory pipe size)	mm	Φ6.35	Φ6.35	Φ9.52	Φ9.52	Φ9.52	Φ9.52	Φ9.52	Φ9.52	Φ9.52
		inch	Φ1/4	Φ1/4	Φ3/8	Φ3/8	Φ3/8	Φ3/8	Φ3/8	Φ3/8	Φ3/8
	Air Handling Unit, Liquid Pipe	mm	Φ6.35	Φ6.35	Φ6.35	Φ9.52	Φ9.52	Φ9.52	Φ9.52	Φ9.52	Φ9.52
		inch	Φ1/4	Φ1/4	Φ1/4	Φ3/8	Φ3/8	Φ3/8	Φ3/8	Φ3/8	Φ3/8
	Air Handling Unit, Gas Pipe	mm	Φ9.52	Φ12.7	Φ12.7	Φ15.9	Φ15.9	Φ15.9	Φ15.9	Φ15.9	Φ19.05
		inch	Φ3/8	Φ1/2	Φ1/2	Φ5/8	Φ5/8	Φ5/8	Φ5/8	Φ5/8	Φ3/4
	Connection Method		Brazing Connection			Brazing Connection			Brazing Connection		
Outline dimensions (W×D×H)	EXV Box	mm	203×326×85			203×326×85			203×326×85		
		inch	8×12-7/8×3-3/8			8×12-7/8×3-3/8			8×12-7/8×3-3/8		
	Control Box	mm	334×284×111			334×284×111			334×284×111		
		inch	13-1/8×11-1/8×4-3/8			13-1/8×11-1/8×4-3/8			13-1/8×11-1/8×4-3/8		
Net Weight	kg		10.0			10.5			10.5		
	LBS		22			23			23		

Model			GMV-N96U/C-T(U)				GMV-N192U/C-T(U)		
Defaulted Capacity of ex-factory	Capacity		96				192		
	Cooling	kW	28.1				56.3		
	Cooling	kBtu/h	96.0				192.0		
	Heating	kW	31.7				63.3		
	Heating	kBtu/h	108.0				216.0		
Adjustable Capacity	Capacity		72	96	120	144	168	192	288
	Cooling	kW	21.1	28.1	35.2	42.2	49.2	56.3	84.4
	Cooling	kBtu/h	72	96	120	144	168	192	288
	Heating	kW	23.7	31.7	39.6	47.5	55.4	63.3	95.0
	Heating	kBtu/h	81	108	135	162	189	216	324
Power Input		W	8.0				8.0		
Power Supply		—	208/230V ~60Hz				208/230V ~60Hz		
Diameter of Connection Pipe	AHU-KIT (ex-factory pipe size)	mm	Φ9.52	Φ9.52	Φ9.52	Φ9.52	Φ15.9	Φ15.9	Φ15.9
		inch	Φ3/8	Φ3/8	Φ3/8	Φ3/8	Φ5/8	Φ5/8	Φ5/8
	Air Handling Unit, Liquid Pipe	mm	Φ9.52	Φ9.52	Φ12.7	Φ12.7	Φ15.9	Φ15.9	Φ19.05
		inch	Φ3/8	Φ3/8	Φ1/2	Φ1/2	Φ5/8	Φ5/8	Φ3/4
	Air Handling Unit, Gas Pipe	mm	Φ19.05	Φ22.2	Φ28.6	Φ28.6	Φ28.6	Φ28.6	Φ34.9
		inch	Φ3/4	Φ7/8	Φ1-1/8	Φ1-1/8	Φ1-1/8	Φ1-1/8	Φ1-3/8
	Connection Method		Brazing Connection				Brazing Connection		

Model			GMV-N96U/C-T(U)	GMV-N192U/C-T(U)
Outline Dimensions (W×D×H)	EXV Box	mm	203×326×85	246×500×120
		inch	8×12-7/8×3-3/8	9-5/8×19-5/8×4-3/4
	Control Box	mm	334×284×111	334×284×111
		inch	13-1/8×11-1/8×4-3/8	13-1/8×11-1/8×4-3/8
Net Weight	kg		10.5	13.0
	LBS		23	29

Model(Combined)				GMV-N48U/C-T(U) +GMV-N192U/C-T(U)	GMV-N96U/C-T(U) +GMV-N192U/C-T(U)	GMV-N192U/C-T(U) +GMV-N192U/C-T(U)	
Capacity				48+288	96+288	192+288	288+288
Cooling			kW	98.5	112.5	140.7	168.8
Cooling			kBtu/h	336	384	480	576
Heating			kW	110.8	126.6	158.3	189.9
Heating			kBtu/h	378	432	540	648
Power Input			W	8.0+8.0	8.0+8.0	8.0+8.0	
Power Supply			—	208/230V ~60Hz	208/230V ~60Hz	208/230V ~60Hz	
Diameter of Connection pipe	Air Handling Unit	Liquid Pipe	mm	Φ19.05	Φ19.05	Φ19.05	Φ19.05
			inch	Φ3/4	Φ3/4	Φ3/4	Φ3/4
		Gas Pipe	mm	Φ34.9	Φ41.3	Φ41.3	Φ41.3
			inch	Φ1-3/8	Φ1-5/8	Φ1-5/8	Φ1-5/8
Outline Dimensions (W×D×H)	Electronic Expansion Valve Box		mm	(203×326×85) +(246×500×120)	(203×326×85) +(246×500×120)	(246×500×120)×2	
			inch	(8×12-7/8×3-3/8) +(9-5/8×19-5/8×4-3/4)	(8×12-7/8×3-3/8) +(9-5/8×19-5/8×4-3/4)	(9-5/8×19-5/8×4-3/4)×2	
	Control Box		mm	(334×284×111)×2	(334×284×111)×2	(334×284×111)×2	
			inch	(13-1/8×11-1/8×4-3/8)×2	(13-1/8×11-1/8×4-3/8)×2	(13-1/8×11-1/8×4-3/8) ×2	
Net Weight			kg	10.5+13.0	10.5+13.0	13.0+13.0	
			LBS	23+29	23+29	29+29	

2.14 1-way Cassette Type

Model			GMV-ND07TD/A-T(U)	GMV-ND09TD/A-T(U)	GMV-ND12TD/A-T(U)
Product Code			CM502N0152	CM502N0162	CM502N0182
Cooling Capacity		Btu/h	7500	9500	12000
		kW	2.2	2.8	3.6
Heating Capacity		Btu/h	8500	10500	13500
		kW	2.5	3.2	4
Casing Finish			Galvanized Steel plate		
Dimensions (W×D×H)	Body Outline	mm	987×385×178	987×385×178	987×385×178
		inch	38-7/8×15-3/16×7	38-7/8×15-3/16×7	38-7/8×15-3/16×7
	Body Packaging	mm	1307×501×310	1307×501×310	1307×501×310
		inch	51-1/2×19-3/4×12-3/16	51-1/2×19-3/4×12-3/16	51-1/2×19-3/4×12-3/16
	Panel Outline	mm	1200×460×55	1200×460×55	1200×460×55
		inch	47-1/4×18-1/8×2-3/16	47-1/4×18-1/8×2-3/16	47-1/4×18-1/8×2-3/16
	Panel Packaging	mm	1265×536×118	1265×536×118	1265×536×118
		inch	49-13/16×21-1/8×4-3/4	49-13/16×21-1/8×4-3/4	49-13/16×21-1/8×4-3/4
Net Weigh	Main Body	LBS	44	44	44
		kg	20	20	20
	Panel	LBS	9.3	9.3	9.3
		kg	4.2	4.2	4.2

Model			GMV-ND07TD/A-T(U)	GMV-ND09TD/A-T(U)	GMV-ND12TD/A-T(U)
Gross Weigh	Main Body	LBS	60	60	60
		kg	27	27	27
	Panel	LBS	13.2	13.2	13.2
		kg	6	6	6
Pipe Connections	Liquid Side	mm	Φ6.35	Φ6.35	Φ6.35
		inch	Φ1/4	Φ1/4	Φ1/4
	Gas Side	mm	Φ9.52	Φ9.52	Φ12.7
		inch	Φ3/8	Φ3/8	Φ1/2
	Drain Pipe	mm	Φ25	Φ25	Φ25
		inch	Φ1	Φ1	Φ1
Power supply			1-phase 208/230V 60Hz		
Fan	Type * Quantity		Cross-flow	Cross-flow	Cross-flow
	Driving Mechanism		Direct-driven	Direct-driven	Direct-driven
	Motor Type		BLDC	BLDC	BLDC
	Motor Power Input	W	30	30	30
	Motor Running Current	A	0.2	0.2	0.2
	Airflow Rate(H/M/L)	CFM	353/294/265	353/294/265	353/294/265
		m^3/h	600/500/450	600/500/450	600/500/450
Sound Pressure Level(H/M/L)		dB(A)	36/32/28	36/32/28	36/32/28
Heat Exchanger			Fenestrate plain film --hydrophilic film		
Air Filter			PP	PP	PP
Insulation Material			Foamed polystyrene	Foamed polystyrene	Foamed polystyrene
Refrigeration Control Device			EXV	EXV	EXV
Protection Device			Fuse	Fuse	Fuse
Panel Name			TD01	TD01	TD01

2.15 General Static Pressure Duct Type Indoor Unit

Model			GMV-ND30PLS/C-T(U)	GMV-ND36PLS/C-T(U)	GMV-ND42PLS/C-T(U)	GMV-ND48PLS/C-T(U)
Product Code			CM810N2020	CM810N2010	CM810N2000	CM810N1990
Cooling Capacity		Btu/h	30000	36000	42000	48000
		kW	8.8	10.6	12.3	14.1
Heating Capacity		Btu/h	34000	40000	47000	54000
		kW	10.0	11.7	13.8	15.8
Casing Finish			Galvanized Steel plate			
Dimensions (W×D×H)	Outline	mm	1340×655×260	1340×655×260	1340×655×260	1340×655×260
		inch	52-3/4×25-13/16×10-1/4	52-3/4×25-13/16×10-1/4	52-3/4×25-13/16×10-1/4	52-3/4×25-13/16×10-1/4
	Packaging	mm	1588×858×315	1588×858×315	1588×858×315	1588×858×315
		inch	62-1/2×33-3/4×12-3/8	62-1/2×33-3/4×12-3/8	62-1/2×33-3/4×12-3/8	62-1/2×33-3/4×12-3/8
Net Weight		LBS	100	100	102	102
		kg	45.5	45.5	46.5	46.5
Gross Weight		LBS	120	120	122	122
		kg	54.5	54.5	55.5	55.5
Pipe Connection	Liquid Side	mm	Φ9.52	Φ9.52	Φ9.52	Φ9.52
		inch	Φ3/8	Φ3/8	Φ3/8	Φ3/8
	Gas Side	mm	Φ15.9	Φ15.9	Φ15.9	Φ15.9
		inch	Φ5/8	Φ5/8	Φ5/8	Φ5/8
	Drain Pipe	mm	Φ25	Φ25	Φ25	Φ25
		inch	Φ2.5	Φ2.5	Φ2.5	Φ2.5
Power Supply			1-phase 208/230V 60Hz			

Model				GMV-ND30PLS/C-T(U)	GMV-ND36PLS/C-T(U)	GMV-ND42PLS/C-T(U)	GMV-ND48PLS/C-T(U)
Fan	Type * Quantity			Centrifugal*3	Centrifugal*3	Centrifugal*3	Centrifugal*3
	Driving Mechanism			Direct-driven			
	Motor Type			BLDC			
	Motor Power Input		W	130	130	170	170
	Motor Running Current		A	2.4	2.4	2.4	2.4
	Airflow Rate(H/M/L)		CFM	880/735/530	1000/880/650	1180/1000/825	1180/1000/825
			m^3/h	1500/1250/900	1700/1500/1100	2000/1700/1400	2000/1700/1400
	External Static Pressure	Default	In.W.G	0.2	0.2	0.2	0.2
			Pa	50	50	50	50
		Range	In.W.G	0~0.32	0~0.32	0~0.32	0~0.32
			Pa	0~80	0~80	0~80	0~80
Sound Pressure Level(H/M/L)			dB(A)	40/36/32	40/36/32	42/40/37	42/40/37
Heat Exchanger				Fenestrate plain film --hydrophilic film			
Air Filter				PP			
Refrigeration Control Device				EXV			
Protection Device				Fuse			

2.16 360°Air Discharge Compact Cassette Type

Model			GMV-ND05T/E-T(U)	GMV-ND07T/E-T(U)	GMV-ND09T/E-T(U)
Product Code			CM500N1600	CM500N1590	CM500N1620
Cooling Capacity		Btu/h	5800	7500	9500
		kW	1.7	2.2	2.8
Heating Capacity		Btu/h	6200	8500	10500
		kW	1.8	2.5	3.1
Casing Finish			Galvanized Steel plate		
Dimensions (W×D×H)	Body Outline	mm	570×570×265	570×570×265	570×570×265
		inch	22-7/16×22-7/16×10-7/16	22-7/16×22-7/16×10-7/16	22-7/16×22-7/16×10-7/16
	Body Packaging	mm	698×653x295	698×653x295	698×653x295
		inch	27-1/2×25-11/16×11-5/8	27-1/2×25-11/16×11-5/8	27-1/2×25-11/16×11-5/8
	Panel Outline	mm	620×620×47.5	620×620×47.5	620×620×47.5
		inch	24-3/8×24-3/8×1-7/8	24-3/8×24-3/8×1-7/8	24-3/8×24-3/8×1-7/8
	Panel Packaging	mm	701×701×125	701×701×125	701×701×125
		inch	27-5/8×27-5/8×5	27-5/8×27-5/8×5	27-5/8×27-5/8×5
Net Weigh	Main Body	LBS	38.6	38.6	38.6
		kg	17.5	17.5	17.5
	Panel	LBS	6.6	6.6	6.6
		kg	3.0	3.0	3.0
Gross Weigh	Main Body	LBS	49.6	49.6	49.6
		kg	22.5	22.5	22.5
	Panel	LBS	10	10	10
		kg	4.5	4.5	4.5
Pipe Connections	Liquid Side	mm	Φ6.35	Φ6.35	Φ6.35
		inch	Φ1/4	Φ1/4	Φ1/4
	Gas Side	mm	Φ9.52	Φ9.52	Φ9.52
		inch	Φ3/8	Φ3/8	Φ3/8
	Drain Pipe	mm	Φ25	Φ25	Φ25
		inch	Φ1	Φ1	Φ1
Power Supply			1-phase 208/230V 60Hz		

Model			GMV-ND05T/E-T(U)	GMV-ND07T/E-T(U)	GMV-ND09T/E-T(U)
Fan	Type × Quantity		Centrifugal×1	Centrifugal×1	Centrifugal×1
	Driving Mechanism		Direct-driven	Direct-driven	Direct-driven
	Motor Type		BLDC	BLDC	BLDC
	Motor Power Input	W	35	35	35
	Motor Running Current	A	0.3	0.3	0.3
	Airflow Rate(H/M/L)	CFM	270/250/220	295/270/220	335/280/250
		m^3/h	460/420/370	500/460/370	570/480/420
Sound Pressure Level(H/M/L)		dB(A)	33/30/25	36/31/25	36/33/28
Heat Exchanger			Fenestrate plain film --hydrophilic film		
Air Filter			PP	PP	PP
Insulation Material			Foamed polystyrene	Foamed polystyrene	Foamed polystyrene
Refrigeration Control Device			EXV	EXV	EXV
Protection Device			Fuse	Fuse	Fuse
Panel Name			TF05	TF05	TF05

Model			GMV-ND12T/E-T(U)	GMV-ND15T/E-T(U)	GMV-ND18T/E-T(U)
Product Code			CM500N1580	CM500N1610	CM500N1570
Cooling Capacity		Btu/h	12000	15000	18000
		kW	3.5	4.4	5.3
Heating Capacity		Btu/h	13500	17000	20000
		kW	4	5	5.9
Casing Finish			Galvanized Steel plate		
Dimensions (W×D×H)	Body Outline	mm	570×570×265	570×570×265	570×570×265
		inch	22-7/16×22-7/16×10-7/16	22-7/16×22-7/16×10-7/16	22-7/16×22-7/16×10-7/16
	Body Packaging	mm	698×653x295	698×653x295	698×653x295
		inch	27-1/2×25-11/16×11-5/8	27-1/2×25-11/16×11-5/8	27-1/2×25-11/16×11-5/8
	Panel Outline	mm	620×620×47.5	620×620×47.5	620×620×47.5
		inch	24-3/8×24-3/8×1-7/8	24-3/8×24-3/8×1-7/8	24-3/8×24-3/8×1-7/8
	Panel Packaging	mm	701×701×125	701×701×125	701×701×125
		inch	27-5/8×27-5/8×5	27-5/8×27-5/8×5	27-5/8×27-5/8×5
Net Weigh	Main Body	LBS	38.6	38.6	38.6
		kg	17.5	17.5	17.5
	Panel	LBS	6.6	6.6	6.6
		kg	3.0	3.0	3.0
Gross Weigh	Main Body	LBS	49.6	49.6	49.6
		kg	22.5	22.5	22.5
	Panel	LBS	10	10	10
		kg	4.5	4.5	4.5
Pipe Connections	Liquid Side	mm	Φ6.35	Φ6.35	Φ9.52
		inch	Φ1/4	Φ1/4	Φ3/8
	Gas Side	mm	Φ12.7	Φ12.7	Φ15.9
		inch	Φ1/2	Φ1/2	Φ5/8
	Drain Pipe	mm	Φ25	Φ25	Φ25
		inch	Φ1	Φ1	Φ1
Power Supply			1-phase 208/230V 60Hz		

Model			GMV-ND12T/E-T(U)	GMV-ND15T/E-T(U)	GMV-ND18T/E-T(U)
Fan	Type × Quantity		Centrifugal×1	Centrifugal×1	Centrifugal×1
	Driving Mechanism		Direct-driven	Direct-driven	Direct-driven
	Motor Type		BLDC	BLDC	BLDC
	Motor Power Input	W	46	46	46
	Motor Running Current	A	0.4	0.4	0.4
	Airflow Rate(H/M/L)	CFM	365/325/280	430/385/330	430/385/330
		m^3/h	620/550/480	730/650/560	730/650/560
Sound Pressure Level(H/M/L)		dB(A)	39/37/35	43/41/39	43/41/39
Heat Exchanger			Fenestrate plain film --hydrophilic film		
Air Filter			PP	PP	PP
Insulation Material			Foamed polystyrene	Foamed polystyrene	Foamed polystyrene
Refrigeration Control Device			EXV	EXV	EXV
Protection Device			Fuse	Fuse	Fuse
Panel Name			TF05	TF05	TF05

2.17 360°Air Discharge Cassette Indoor Unit

GMV-ND**T/C-T(U):

Model			GMV-ND07T/C-T(U)	GMV-ND09T/C-T(U)	GMV-ND12T/C-T(U)	GMV-ND15T/C-T(U)	GMV-ND18T/C-T(U)
Product Code			CM500N1560	CM500N1480	CM500N1530	CM500N1460	CM500N1470
Cooling Capacity		Btu/h	7500	9500	12000	15000	18000
		kW	2.2	2.8	3.5	4.4	5.3
Heating Capacity		Btu/h	8500	10500	13500	17000	20000
		kW	2.5	3.1	4.0	5	5.9
Casing Finish			Galvanized Steel plate				
Dimensions (W×D×H)	Body Outline	mm	840×840×240	840×840×240	840×840×240	840×840×240	840×840×240
		inch	33-1/8×33-1/8×9 1/2	33-1/8×33-1/8×9 1/2	33-1/8×33-1/8×9 1/2	33-1/8×33-1/8×9 1/2	33-1/8×33-1/8×9 1/2
	Body Packaging	mm	963×963×325	963×963×325	963×963×325	963×963×325	963×963×325
		inch	37-7/8 ×37-7/8 ×12-3/4	37-7/8 ×37-7/8 ×12-3/4	37-7/8 ×37-7/8 ×12-3/4	37-7/8 ×37-7/8 ×12-3/4	37-7/8 ×37-7/8 ×12-3/4
	Panel Outline	mm	950×950×65	950×950×65	950×950×65	950×950×65	950×950×65
		inch	37-3/8×37-3/8 ×2-1/2	37-3/8×37-3/8 ×2-1/2	37-3/8×37-3/8 ×2-1/2	37-3/8×37-3/8 ×2-1/2	37-3/8×37-3/8 ×2-1/2
	Panel Packaging	mm	1038×1033 ×112	1038×1033 ×112	1038×1033 ×112	1038×1033 ×112	1038×1033 ×112
		inch	40-7/8 ×40-5/8×4-3/8	40-7/8 ×40-5/8×4-3/8	40-7/8 ×40-5/8×4-3/8	40-7/8 ×40-5/8×4-3/8	40-7/8 ×40-5/8×4-3/8
Net Weigh	Main Body	LBS	64	64	64	64	64
		kg	29	29	29	29	29
	Panel	LBS	13	13	13	13	13
		kg	6	6	6	6	6
Gross Weigh	Main Body	LBS	82	82	82	82	82
		kg	37	37	37	37	37
	Panel	LBS	21	21	21	21	21
		kg	9.5	9.5	9.5	9.5	9.5
Pipe Connections	Liquid Side	mm	Φ6.35	Φ6.35	Φ6.35	Φ6.35	Φ9.52
		inch	Φ1/4	Φ1/4	Φ1/4	Φ1/4	Φ3/8
	Gas Side	mm	Φ9.52	Φ9.52	Φ12.7	Φ12.7	Φ15.9
		inch	Φ3/8	Φ3/8	Φ1/2	Φ1/2	Φ5/8
	Drain Pipe	mm	Φ25	Φ25	Φ25	Φ25	Φ25
		inch	Φ1	Φ1	Φ1	Φ1	Φ1

Model			GMV-ND07T/C-T(U)	GMV-ND09T/C-T(U)	GMV-ND12T/C-T(U)	GMV-ND15T/C-T(U)	GMV-ND18T/C-T(U)
Power Supply			1-phase 208/230V 60Hz				
Fan	Type × Quantity		Centrifugal×1	Centrifugal×1	Centrifugal×1	Centrifugal×1	Centrifugal×1
	Driving Mechanism		Direct-driven	Direct-driven	Direct-driven	Direct-driven	Direct-driven
	Motor Type		BLDC	BLDC	BLDC	BLDC	BLDC
	Motor Running Current	A	0.6	0.6	0.6	0.6	0.7
	Airflow Rate(H/M/L)	CFM	470/410/355	470/410/355	470/410/355	470/410/355	560/500/440
		m^3/h	800/700/600	800/700/600	800/700/600	800/700/600	950/850/750
Sound Pressure Level(H/M/L)		dB(A)	34/32/30	34/32/30	34/32/30	34/32/30	38/36/33
Heat Exchanger			Fenestrate plain film --hydrophilic film				
Air Filter			PP	PP	PP	PP	PP
Insulation Material			Foamed polystyrene	Foamed polystyrene	Foamed polystyrene	Foamed polystyrene	Foamed polystyrene
Refrigeration Control Device			EXV	EXV	EXV	EXV	EXV
Protection Device			Fuse	Fuse	Fuse	Fuse	Fuse
Panel Name			TF06	TF06	TF06	TF06	TF06

Model			GMV-ND22T/C-T(U)	GMV-ND24T/C-T(U)	GMV-ND30T/C-T(U)	GMV-ND36T/C-T(U)	GMV-ND42T/C-T(U)	GMV-ND48T/C-T(U)	GMV-ND54T/C-T(U)
Product Code			CM500N1520	CM500N1490	CM500N1550	CM500N1500	CM500N1450	CM500N1540	CM500N1870
Cooling Capacity		Btu/h	22000	24000	30000	36000	42000	48000	54000
		kW	6.4	7	8.8	10.6	12.3	14.1	15.8
Heating Capacity		Btu/h	24000	27000	34000	40000	47000	54000	60000
		kW	7	7.9	10	11.7	13.8	15.8	17.6
Casing Finish			Galvanized Steel plate						
Dimensions (W×D×H)	Body Outline	mm	840×840×240	840×840×240	840×840×290	840×840×290	840×840×290	840×840×290	840×840×290
		inch	33-1/8×33-1/8×9-1/2	33-1/8×33-1/8×9-1/2	33-1/8×33-1/8×11-3/8	33-1/8×33-1/8×11-3/8	33-1/8×33-1/8×11-3/8	33-1/8×33-1/8×11-3/8	33 1/8×33 1/8×11 3/8
	Body Packaging	mm	963×963×325	963×963×325	963×963×379	963×963×379	963×963×379	963×963×379	963×963×379
		inch	37-7/8×37-7/8×12-3/4	37-7/8×37-7/8×12-3/4	37-7/8×37-7/8×14-7/8	37-7/8×37-7/8×14-7/8	37-7/8×37-7/8×14-7/8	37-7/8×37-7/8×14-7/8	37 7/8×37 7/8×14 7/8
	Panel Outline	mm	950×950×65	950×950×65	950×950×65	950×950×65	950×950×65	950×950×65	950×950×65
		inch	37-3/8×37-3/8×2-1/2	37-3/8×37-3/8×2-1/2	37-3/8×37-3/8×2-1/2	37-3/8×37-3/8×2-1/2	37-3/8×37-3/8×2-1/2	37-3/8×37-3/8×2-1/2	37-3/8×37-3/8×2-1/2
	Panel Packaging	mm	1038×1033×112	1038×1033×112	1038×1033×112	1038×1033×112	1038×1033×112	1038×1033×112	1033×1020×110
		inch	40-7/8×40-5/8×4-3/8	40-7/8×40-5/8×4-3/8	40-7/8×40-5/8×4-3/8	40-7/8×40-5/8×4-3/8	40-7/8×40-5/8×4-3/8	40-7/8×40-5/8×4-3/8	40-7/8×40-5/8×4-3/8
Net Weight	Main Body	LBS	64	64	73	73	73	73	79
		kg	29	29	33	33	33	33	36
	Panel	LBS	13	13	13	13	13	13	13
		kg	6	6	6	6	6	6	6
Gross Weight	Main Body	LBS	82	82	93	93	93	93	97
		kg	37	37	42	42	42	42	44
	Panel	LBS	21	21	21	21	21	21	21
		kg	9.5	9.5	9.5	9.5	9.5	9.5	9.5

Model			GMV-ND22 T/C-T(U)	GMV-ND24 T/C-T(U)	GMV-ND30 T/C-T(U)	GMV-ND36 T/C-T(U)	GMV-ND42 T/C-T(U)	GMV-ND48 T/C-T(U)	GMV-ND54 T/C-T(U)
Pipe Connections	Liquid Side	mm	Φ9.52	Φ9.52	Φ9.52	Φ9.52	Φ9.52	Φ9.52	Φ9.52
		inch	Φ3/8	Φ3/8	Φ3/8	Φ3/8	Φ3/8	Φ3/8	Φ3/8
	Gas Side	mm	Φ15.9	Φ15.9	Φ15.9	Φ15.9	Φ15.9	Φ15.9	Φ19.05
		inch	Φ5/8	Φ5/8	Φ5/8	Φ5/8	Φ5/8	Φ5/8	Φ3/4
	Drain Pipe	mm	Φ25	Φ25	Φ25	Φ25	Φ25	Φ25	Φ25
		inch	Φ1	Φ1	Φ1	Φ1	Φ1	Φ1	Φ1
Power Supply			1-phase 208/230V 60Hz						
Fan	Type × Quantity		Centrifugal×1	Centrifugal×1	Centrifugal×1	Centrifugal×1	Centrifugal×1	Centrifugal×1	Centrifugal×1
	Driving Mechanism		Direct-driven	Direct-driven	Direct-driven	Direct-driven	Direct-driven	Direct-driven	Direct-driven
	Motor Type		BLDC	BLDC	BLDC	BLDC	BLDC	BLDC	BLDC
	Motor Running Current	A	0.7	0.7	0.8	1.0	1.5	1.5	1.5
	Airflow Rate(H/M/L)	CFM	560/500 /440	675/560 /500	1250/1000 /900	1500/1200 /1000	1650/1300 /1100	1650/1300 /1100	2000/1800 /1430
		m^3/h	950/850 /750	1150/950 /850	735/590 /530	885/705 /590	970/765 /645	970/765 /645	1180/1060 /840
Sound Pressure Level(H/M/L)		dB(A)	38/36/33	38/36/34	39/37/34	43/39/37	45/41/39	45/41/39	51/48/42
Heat Exchanger			Fenestrate plain film --hydrophilic film						
Air Filter			PP	PP	PP	PP	PP	PP	PP
Insulation Material			Foamed polystyrene	Foamed polystyrene	Foamed polystyrene	Foamed polystyrene	Foamed polystyrene	Foamed polystyrene	Foamed polystyrene
Refrigeration Control Device			EXV	EXV	EXV	EXV	EXV	EXV	EXV
Protection Device			Fuse	Fuse	Fuse	Fuse	Fuse	Fuse	Fuse
Panel Name			TF06	TF06	TF06	TF06	TF06	TF06	TF06

GMV-ND**T/D-T(U):

Model			GMV-ND07T/D-T(U)	GMV-ND09T/D-T(U)	GMV-ND12T/D-T(U)	GMV-ND15T/D-T(U)	GMV-ND18T/D-T(U)
Product Code			CM500N2250	CM500N2230	CM500N2220	CM500N2090	CM500N2240
Cooling Capacity		Btu/h	7500	9500	12000	15000	18000
		kW	2.2	2.8	3.5	4.4	5.3
Heating Capacity		Btu/h	8500	10500	13500	17000	20000
		kW	2.5	3.1	4.0	5.0	5.9
Casing Finish			Galvanized Steel plate				
Dimensions (W×D×H)	Body Outline	mm	840×840×240	840×840×240	840×840×240	840×840×240	840×840×240
		inch	33-1/16×33-1/16×9-7/16	33-1/16×33-1/16×9-7/16	33-1/16×33-1/16×9-7/16	33-1/16×33-1/16×9-7/16	33-1/16×33-1/16×9-7/16
	Body Packaging	mm	933×933×292	933×933×292	933×933×292	933×933×292	933×933×292
		inch	36-3/4×36-3/4×11-1/2	36-3/4×36-3/4×11-1/2	36-3/4×36-3/4×11-1/2	36-3/4×36-3/4×11-1/2	36-3/4×36-3/4×11-1/2
	Panel Outline	mm	950×950×65	950×950×65	950×950×65	950×950×65	950×950×65
		inch	37-3/8×37-3/8×2-9/16	37-3/8×37-3/8×2-9/16	37-3/8×37-3/8×2-9/16	37-3/8×37-3/8×2-9/16	37-3/8×37-3/8×2-9/16
	Panel Packaging	mm	1033×1020×110	1033×1020×110	1033×1020×110	1033×1020×110	1033×1020×110
		inch	40-5/8×40-1/8×4-3/8	40-5/8×40-1/8×4-3/8	40-5/8×40-1/8×4-3/8	40-5/8×40-1/8×4-3/8	40-5/8×40-1/8×4-3/8
Net Weigh	Main Body	LBS	50	50	50	50	50
		kg	22.5	22.5	22.5	22.5	22.5
	Panel	LBS	13.2	13.2	13.2	13.2	13.2
		kg	6	6	6	6	6

Model			GMV-ND07T/D-T(U)	GMV-ND09T/D-T(U)	GMV-ND12T/D-T(U)	GMV-ND15T/D-T(U)	GMV-ND18T/D-T(U)
Gross Weigh	Main Body	LBS	62	62	62	62	62
		kg	28	28	28	28	28
	Panel	LBS	20.9	20.9	20.9	20.9	20.9
		kg	9.5	9.5	9.5	9.5	9.5
Pipe Connections	Liquid Side	mm	Φ6.35	Φ6.35	Φ6.35	Φ6.35	Φ9.52
		inch	Φ1/4	Φ1/4	Φ1/4	Φ1/4	Φ3/8
	Gas Side	mm	Φ9.52	Φ9.52	Φ12.7	Φ12.7	Φ15.9
		inch	Φ3/8	Φ3/8	Φ1/2	Φ1/2	Φ5/8
	Drain Pipe	mm	Φ25	Φ25	Φ25	Φ25	Φ25
		inch	Φ1	Φ1	Φ1	Φ1	Φ1
Power Supply			1-phase 208/230V 60Hz				
Fan	Type × Quantity		Centrifugal×1	Centrifugal×1	Centrifugal×1	Centrifugal×1	Centrifugal×1
	Driving Mechanism		Direct-driven	Direct-driven	Direct-driven	Direct-driven	Direct-driven
	Motor Type		BLDC	BLDC	BLDC	BLDC	BLDC
	Motor Running Current	A	0.5	0.5	0.5	0.5	0.5
	Airflow Rate(H/M/L)	CFM	470/412/353	470/412/353	470/412/353	470/412/353	560/500/440
		m³/h	799/700/600	799/700/600	799/700/600	799/700/600	952/850/748
Sound Pressure Level(H/M/L)		dB(A)	37/35/32	37/35/32	37/35/32	37/35/32	39/37/34
Heat Exchanger			Fenestrate plain film --hydrophilic film				
Air Filter			PP	PP	PP	PP	PP
Insulation Material			Foamed polystyrene	Foamed polystyrene	Foamed polystyrene	Foamed polystyrene	Foamed polystyrene
Refrigeration Control Device			EXV	EXV	EXV	EXV	EXV
Protection Device			Fuse	Fuse	Fuse	Fuse	Fuse
Panel Name			TF06	TF06	TF06	TF06	TF06

Model			GMV-ND22T/D-T(U)	GMV-ND24T/D-T(U)	GMV-ND30T/D-T(U)	GMV-ND36T/D-T(U)	GMV-ND42T/D-T(U)	GMV-ND48T/D-T(U)
Product Code			CM500N2070	CM500N2060	CM500N2200	CM500N2080	CM500N2010	CM500N2050
Cooling Capacity		Btu/h	22000	24000	30000	36000	42000	48000
		kW	6.4	7.0	8.8	10.6	12.3	14.1
Heating Capacity		Btu/h	24000	27000	34000	40000	47000	54000
		kW	7.0	7.9	10.0	11.7	13.8	15.8
Casing Finish			Galvanized Steel plate					
Dimensions (W×D×H)	Body Outline	mm	840×840 ×240	840×840 ×290	840×840 ×290	840×840 ×290	840×840 ×290	840×840 ×290
		inch	33-1/16 ×33-1/16 ×9-7/16	33-1/16 ×33-1/16 ×11-7/16	33-1/16 ×33-1/16 ×11-7/16	33-1/16 ×33-1/16 ×11-7/16	33-1/16 ×33-1/16 ×11-7/16	33-1/16 ×33-1/16 ×11-7/16
	Body Packaging	mm	933×933 ×292	933×933 ×345	933×933 ×345	933×933 ×345	933×933 ×345	933×933 ×345
		inch	36-3/4 ×36-3/4 ×11-1/2	36-3/4 ×36-3/4 ×13-9/16	36-3/4 ×36-3/4 ×13-9/16	36-3/4 ×36-3/4 ×13-9/16	36-3/4 ×36-3/4 ×13-9/16	36-3/4 ×36-3/4 ×13-9/16
	Panel Outline	mm	950×950×65	950×950×65	950×950×65	950×950×65	950×950×65	950×950×65
		inch	37-3/8 ×37-3/8 ×2-9/16	37-3/8 ×37-3/8 ×2-9/16	37-3/8 ×37-3/8 ×2-9/16	37-3/8 ×37-3/8 ×2-9/16	37-3/8 ×37-3/8 ×2-9/16	37-3/8 ×37-3/8 ×2-9/16
	Panel Packaging	mm	1033×1020×110	1033×1020×110	1033×1020×110	1033×1020×110	1033×1020×110	1033×1020×110
		inch	40-5/8 ×40-1/8 ×4-3/8	40-5/8 ×40-1/8 ×4-3/8	40-5/8 ×40-1/8 ×4-3/8	40-5/8 ×40-1/8 ×4-3/8	40-5/8 ×40-1/8 ×4-3/8	40-5/8 ×40-1/8 ×4-3/8

Model			GMV-ND22T/D-T(U)	GMV-ND24T/D-T(U)	GMV-ND30T/D-T(U)	GMV-ND36T/D-T(U)	GMV-ND42T/D-T(U)	GMV-ND48T/D-T(U)
Net Weight	Main Body	LBS	50	55	55	55	55	55
		kg	22.5	25	25	25	25	25
	Panel	LBS	13.2	13.2	13.2	13.2	13.2	13.2
		kg	6	6	6	6	6	6
Gross Weight	Main Body	LBS	62	67	67	67	67	67
		kg	28	30.5	30.5	30.5	30.5	30.5
	Panel	LBS	20.9	20.9	20.9	20.9	20.9	20.9
		kg	9.5	9.5	9.5	9.5	9.5	9.5
Pipe Connections	Liquid Side	mm	Φ9.52	Φ9.52	Φ9.52	Φ9.52	Φ9.52	Φ9.52
		inch	Φ3/8	Φ3/8	Φ3/8	Φ3/8	Φ3/8	Φ3/8
	Gas Side	mm	Φ15.9	Φ15.9	Φ15.9	Φ15.9	Φ15.9	Φ15.9
		inch	Φ5/8	Φ5/8	Φ5/8	Φ5/8	Φ5/8	Φ5/8
	Drain Pipe	mm	Φ25	Φ25	Φ25	Φ25	Φ25	Φ25
		inch	Φ1	Φ1	Φ1	Φ1	Φ1	Φ1
Power Supply			1-phase 208/230V 60Hz					
Fan	Type × Quantity		Centrifugal×1	Centrifugal×1	Centrifugal×1	Centrifugal×1	Centrifugal×1	Centrifugal×1
	Driving Mechanism		Direct-driven	Direct-driven	Direct-driven	Direct-driven	Direct-driven	Direct-driven
	Motor Type		BLDC	BLDC	BLDC	BLDC	BLDC	BLDC
	Motor Running Current	A	0.5	0.6	1.0	1.0	1.0	1.0
	Airflow Rate (H/M/L)	CFM	560/500/440	736/677/588	883/706/588	883/706/588	1060/853/677	1060/853/677
		m³/h	952/850/748	1250/1150/1000	1500/1200/1000	1500/1200/1000	1801/1450/1150	1801/1450/1150
Sound Pressure Level(H/M/L)		dB(A)	39/37/34	39/37/34	44/40/34	44/40/34	46/41/35	46/41/35
Heat Exchanger			Fenestrate plain film --hydrophilic film					
Air Filter			PP	PP	PP	PP	PP	PP
Insulation Material			Foamed polystyrene	Foamed polystyrene	Foamed polystyrene	Foamed polystyrene	Foamed polystyrene	Foamed polystyrene
Refrigeration Control Device			EXV	EXV	EXV	EXV	EXV	EXV
Protection Device			Fuse	Fuse	Fuse	Fuse	Fuse	Fuse
Panel Name			TF06	TF06	TF06	TF06	TF06	TF06

2.18 Dual Fuel A-coil Indoor Unit

Model			GMV-N24AC/VA-T(U)	GMV-N36AC/VA-T(U)	GMV-N48AC/VA-T(U)	GMV-N60AC/VA-T(U)
Product Code			CM810N2980	CM810N2960	CM810N2970	CM810N2950
Cooling Capacity		Btu/h	24000	36000	48000	60000
		kW	7	10.6	14.1	17.6
Heating Capacity		Btu/h	27000	40000	54000	66000
		kW	7.9	11.7	15.8	19.3
Airflow Rate(H/M/L)		CFM	1000-795	1175-970	1295-1090	1705-1500
		m^3/h	1700-1350	2000-1650	2200-1850	2900-2550
Casing Finish			Galvanized Steel plate			
Dimensions (W×D×H)	Outline	inch	17-1/2×21-1/4×23	17-1/2×21-1/4×23	24-1/2×21-1/4×28-1/2	24-1/2×21-1/4×28-1/2
		mm	445×540×584	445×540×584	622×540×724	622×540×724
	Packaging	inch	21×27-1/8×25-3/4	21×27-1/8×25-3/4	28-1/8×27-1/8×31-3/4	28-1/8×27-1/8×31-3/4
		mm	534×689×655	534×689×655	714×689×795	714×689×795

Model			GMV-N24AC/VA-T(U)	GMV-N36AC/VA-T(U)	GMV-N48AC/VA-T(U)	GMV-N60AC/VA-T(U)
Net Weight	Main Body	LBS	73	73	106	106
		kg	33	33	48	48
Gross Weight	Main Body	LBS	82	82	117	117
		kg	37	37	53	53
Pipe Connections	Liquid Side	mm	Φ9.52	Φ9.52	Φ9.52	Φ9.52
		inch	3/8	3/8	3/8	3/8
	Gas Side	mm	Φ15.9	Φ15.9	Φ15.9	Φ19.05
		inch	5/8	5/8	5/8	3/4
	Drain Pipe	mm	Φ25	Φ25	Φ25	Φ25
		inch	1	1	1	1
Power Supply			1-phase 208/230V 60Hz			
Insulation Material			Foamed polystyrene			
Heat Exchanger			Fenestrate plain film -- hydrophilic film			
Refrigeration Control Device			EXV	EXV	EXV	EXV
Protection Device			Fuse	Fuse	Fuse	Fuse

3. Electrical Specifications

3.1 Low Static Pressure Duct Type Indoor Unit

Model		GMV-ND07PLS/A-T(U)	GMV-ND09PLS/A-T(U)	GMV-ND12PLS/A-T(U)	GMV-ND14PLS/A-T(U)	GMV-ND18PLS/A-T(U)	GMV-ND22PLS/A-T(U)
MCA	A	1	1	1	1	1	1
MOP	A	15	15	15	15	15	15
Fuse	A	15	15	15	15	15	15

Model		GMV-ND05PLS/B1-T(U)	GMV-ND07PLS/B1-T(U)	GMV-ND09PLS/81-T(U)	GMV-ND12PLS/B1-T(U)	GMV-ND14PLS/B1-T(U)	GMV-ND18PLS/B1-T(U)	GMV-ND24PLS/B1-T(U)
MCA	A	1	1	1	1	1	1	1
MOP	A	15	15	15	15	15	15	15
Fuse	A	15	15	15	15	15	15	15

3.2 Slim Duct Type Indoor Unit

Model		GMV-ND07PLS/B-T(U)	GMV-ND09PLS/8-T(U)	GMV-ND12PLS/B-T(U)	GMV-ND14PLS/B-T(U)	GMV-ND18PLS/B-T(U)	GMV-ND22PLS/B-T(U)
MCA	A	1	1	1	1	1	1
MOP	A	15	15	15	15	15	15
Fuse	A	15	15	15	15	15	15

3.3 Four-way Cassette Indoor Unit

Model		GMV-ND07T/A-T(U)	GMV-ND09T/A-T(U)	GMV-ND12T/A-T(U)	GMV-ND15T/A-T(U)	GMV-ND18T/A-T(U)
MCA	A	1	1	1	1	1
MOP	A	15	15	15	15	15
Fuse	A	15	15	15	15	15

Model		GMV-ND24T/A-T(U)	GMV-ND30T/A-T(U)	GMV-ND36T/A-T(U)	GMV-ND42T/A-T(U)	GMV-ND48T/A-T(U)
MCA	A	1	1	1	1	1
MOP	A	15	15	15	15	15
Fuse	A	15	15	15	15	15

3.4 High Static Pressure Duct Type Indoor Unit

Model		GMV-ND18PHS/A-T(U)	GMV-ND24PHS/A-T(U)	GMV-ND30PHS/A-T(U)	GMV-ND36PHS/A-T(U)	GMV-ND42PHS/A-T(U)	GMV-ND48PHS/A-T(U)
MCA	A	1.2	1.2	1.8	1.8	2	2
MOP	A	15	15	15	15	15	15
Fuse	A	15	15	15	15	15	15

Model		GMV-ND72PH/A-T(U)	GMV-ND96PH/A-T(U)
MCA	A	6.3	7.5
MOP	A	15	15
Fuse	A	15	15

3.5 Floor Ceiling Type Indoor Unit

Model		GMV-ND09ZD/A-T(U)	GMV-ND12ZD/A-T(U)	GMV-ND18ZD/A-T(U)	GMV-ND24ZD/A-T(U)
MCA	A	1	1	1	1
MOP	A	15	15	15	15
Fuse	A	15	15	15	15

Model		GMV-ND30ZD/A-T(U)	GMV-ND36ZD/A-T(U)	GMV-ND42ZD/A-T(U)	GMV-ND48ZD/A-T(U
MCA	A	1	1	1	1
MOP	A	15	15	15	15
Fuse	A	15	15	15	15

3.6 Wall Mounted Type Indoor Unit

Model		GMV-N07G/A3A-D(U)	GMV-N09G/A3A-D(U)	GMV-N12G/A3A-D(U)	GMV-N18G/A3A-D(U)	GMV-N24G/A3A-D(U)
MCA	A	1	1	1	1	1
MOP	A	15	15	15	15	15

Model		GMV-ND06G/B4B-T(U)	GMV-ND07G/B4B-T(U)	GMV-ND09G/B4B-T(U)	GMV-ND12G/B4B-T(U)	GMV-ND14G/B4B-T(U)
MCA	A	1	1	1	1	1
MOP	A	15	15	15	15	15

Model		GMV-ND18G/B4B-T(U)	GMV-ND24G/B4B-T(U)	GMV-ND30G/B4B-T(U)	GMV-ND36G/B4B-T(U)
MCA	A	1	1	1	1
MOP	A	15	15	15	15

3.7 Fresh Air Processing Unit

Model		GMV-NDX42P/A-T(U)	GMV-NDX48P/A-T(U)	GMV-NDX54P/A-T(U)	GMV-NDX72P/A-T(U)	GMV-NDX96P/A-T(U)
MCA	A	1.7	1.7	6.3	6.3	6.3
MOP	A	15	15	15	15	15
Fuse	A	15	15	15	15	15

3.8 Console Type

Model		GMV-ND07C/A-T(U)	GMV-ND09C/A-T(U)	GMV-ND12C/A-T(U)	GMV-ND18C/A-T(U)
MCA	A	1	1	1	1

Model		GMV-ND07C/A-T(U)	GMV-ND09C/A-T(U)	GMV-ND12C/A-T(U)	GMV-ND18C/A-T(U)
MOP	A	15	15	15	15
Fuse	A	15	15	15	15

3.9 Two-way Cassette Type

Model		GMV-ND09TS/A-T(U)	GMV-ND12TS/A-T(U)	GMV-ND15TS/A-T(U)	GMV-ND18TS/A-T(U)	GMV-ND24TS/A-T(U)
MCA	A	1	1	1	1	1
MOP	A	15	15	15	15	15
Fuse	A	15	15	15	15	15

Model		GMV-ND09TS/B-T(U)	GMV-ND12TS/B-T(U)	GMV-ND15TS/B-T(U)	GMV-ND18TS/B-T(U)	GMV-ND24TS/B-T(U)
MCA	A	1	1	1	1	1
MOP	A	15	15	15	15	15
Fuse	A	15	15	15	15	15

3.10 Compact Four-way Cassette Type

Model		GMV-ND07T/B-T(U)	GMV-ND09T/B-T(U)	GMV-ND12T/B-T(U)	GMV-ND15T/B-T(U)	GMV-ND18T/B-T(U)
MCA	A	2	2	2	2	2
MOP	A	15	15	15	15	15
Fuse	A	15	15	15	15	15

3.11 Super High Static Pressure Duct Type Indoor Unit

GMV-ND**PHS/B-T(U)

Model		GMV-ND07PHS/B-T(U)	GMV-ND09PHS/B-T(U)	GMV-ND12PHS/B-T(U)	GMV-ND15PHS/B-T(U)	GMV-ND18PHS/B-T(U)	GMV-ND22PHS/B-T(U)
MCA	A	1	1	1	1	1	1
MOP	A	15	15	15	15	15	15
Fuse	A	15	15	15	15	15	15

Model		GMV-ND24PHS/B-T(U)	GMV-ND30PHS/B-T(U)	GMV-ND36PHS/B-T(U)	GMV-ND42PHS/B-T(U)	GMV-ND48PHS/B-T(U)	GMV-ND54PHS/B-T(U)
MCA	A	1.2	1.7	1.7	1.7	1.7	1.7
MOP	A	15	15	15	15	15	15
Fuse	A	15	15	15	15	15	15

GMV-ND**PH/B-T(U)

Model		GMV-ND72PH/B-T(U)	GMV-ND96PH/B-T(U)
MCA	A	5.7	6.8
MOP	A	15	15
Fuse	A	15	15

GMV-ND**PHS/D-T(U)

Model		GMV-ND07PHS/D-T(U)	GMV-ND09PHS/D-T(U)	GMV-ND12PHS/D-T(U)	GMV-ND15PHS/D-T(U)	GMV-ND18PHS/D-T(U)	GMV-ND22PHS/D-T(U)
MCA	A	0.9	0.9	1.4	1.4	1.4	2
MOP	A	15	15	15	15	15	15
Fuse	A	15	15	15	15	15	15

Model		GMV-ND24PHS/D-T(U)	GMV-ND30PHS/D-T(U)	GMV-ND36PHS/D-T(U)	GMV-ND42PHS/D-T(U)	GMV-ND48PHS/D-T(U)	GMV-ND54PHS/D-T(U)
MCA	A	2	2.7	2.7	2.7	2.9	2.9
MOP	A	15	15	15	15	15	15
Fuse	A	15	15	15	15	15	15

3.12 Air Handler Type Indoor Unit

Model		GMV-ND09A/A-T(U)	GMV-ND12A/A-T(U)	GMV-ND18A/A-T(U)	GMV-ND24A/A-T(U)	GMV-ND30A/A-T(U)	GMV-ND36A/A-T(U)	GMV-ND42A/A-T(U)	GMV-ND48A/A-T(U)	GMV-ND54A/A-T(U)
MCA	A	1.4	1.4	1.4	1.4	1.8	3.3	3.4	4.3	4.4
MOP	A	15	15	15	15	15	15	15	15	15
Fuse	A	15	15	15	15	15	15	15	15	15

Model		GMV-ND09A/B-T(U)	GMV-ND12A/B-T(U)	GMV-ND18A/B-T(U)	GMV-ND24A/B-T(U)	GMV-ND30A/B-T(U)
MCA	A	3.0	3.0	3.0	4.0	4.0
MOP	A	15	15	15	15	15
Fuse	A	15	15	15	15	15

Model		GMV-ND36A/B-T(U)	GMV-ND42A/B-T(U)	GMV-ND48A/B-T(U)	GMV-ND54A/B-T(U)	GMV-ND60A/B-T(U)
MCA	A	5.0	5.0	8.7	8.7	8.7
MOP	A	15	15	15	15	15
Fuse	A	15	15	15	15	15

3.13 AHU-KIT Type

Model		GMV-N12U/A-T(U)	GMV-N24U/A-T(U)	GMV-N48U/A-T(U)	GMV-N96U/A-T(U)	GMV-N192U/A-T(U)
MCA	A	10	10	10	10	10
MOP	A	15	15	15	15	15
Fuse	A	15	15	15	15	15

Model		GMV-N12U/C-T(U)	GMV-N24U/C-T(U)	GMV-N48U/C-T(U)	GMV-N96U/C-T(U)	GMV-N192U/C-T(U)
MCA	A	10	10	10	10	10
MOP	A	15	15	15	15	15
Fuse	A	15	15	15	15	15

3.14 1-way Cassette Type

Model		GMV-ND07TD/A-T(U)	GMV-ND09TD/A-T(U)	GMV-ND12TD/A-T(U)
MCA	A	0.375	0.375	0.375
MOP	A	15	15	15
Fuse	A	15	15	15

3.15 General Static Pressure Duct Type Indoor Unit

Model		GMV-ND30PLS/C-T(U)	GMV-ND36PLS/C-T(U)	GMV-ND42PLS/C-T(U)	GMV-ND48PLS/C-T(U)
MCA	A	3.0	3.0	3.0	3.0
MOP	A	15	15	15	15
Fuse	A	15	15	15	15

3.16 360°Air Discharge Compact Cassette Type

Model		GMV-ND05T/ET(U)	GMV-ND07T/E-T(U)	GMV-ND09T/E-T(U)	GMV-ND12T/E-T(U)	GMV-ND15T/E-T(U)	GMV-ND18T/E-T(U)
MCA	A	0.7	0.7	0.7	0.8	0.8	0.8
MOP	A	15	15	15	15	15	15
Fuse	A	15	15	15	15	15	15

3.17 360°Air Discharge Cassette Type

GMV-ND**T/C-T(U):

Model		GMV-ND07T/C-T(U)	GMV-ND09T/C-T(U)	GMV-ND12T/C-T(U)	GMV-ND15T/C-T(U)	GMV-ND18T/C-T(U)	GMV-ND22T/C-T(U)
MCA	A	0.8	0.8	0.8	0.8	1.0	1.0
MOP	A	15	15	15	15	15	15
Fuse	A	15	15	15	15	15	15

Model		GMV-ND24T/C-T(U)	GMV-ND30T/C-T(U)	GMV-ND36T/C-T(U)	GMV-ND42T/C-T(U)	GMV-ND48T/C-T(U)	GMV-ND54T/C-T(U)
MCA	A	1.0	2.0	2.0	2.0	2.0	2.0
MOP	A	15	15	15	15	15	15
Fuse	A	15	15	15	15	15	15

GMV-ND**T/D-T(U):

Model		GMV-ND07T/D-T(U)	GMV-ND09T/D-T(U)	GMV-ND12T/D-T(U)	GMV-ND15T/D-T(U)	GMV-ND18T/D-T(U)	GMV-ND22T/D-T(U)
MCA	A	0.7	0.7	0.7	0.7	0.7	0.7
MOP	A	15	15	15	15	15	15
Fuse	A	15	15	15	15	15	15

Model		GMV-ND24T/D-T(U)	GMV-ND30T/D-T(U)	GMV-ND36T/D-T(U)	GMV-ND42T/D-T(U)	GMV-ND48T/D-T(U)
MCA	A	0.8	1.5	1.5	1.5	1.5
MOP	A	15	15	15	15	15
Fuse	A	15	15	15	15	15
Fuse	A	15	15	15	15	15

3.18 Dual Fuel A-coil Indoor Unit

Model		GMV-N24AC/VA-T(U)	GMV-N36AC/VA-T(U)	GMV-N48AC/VA-T(U)	GMV-N60AC/VA-T(U)
MCA	A	0.1	0.1	0.1	0.1
MOP	A	15	15	15	15
Fuse	A	3.15	3.15	3.15	3.15

4. Cooling/Heating Capacity Correction

4.1 Cooling Capacity Correction

TC: Total Capacity; SC: Sensible Capacity

Cooling Capacity (kBtu/h)	Outdoor temperature (℃DB)	Indoor temperature (℃ WB/℃ DB)													
		14.0℃WB		16.0℃WB		18.0℃WB		19.0℃WB		20.0℃WB		22.0℃WB		24.0℃WB	
		20℃DB		23℃DB		26℃DB		27℃DB		28℃DB		30℃DB		32℃DB	
		TC	SC	TC	SC	TC	SC	TC	SC	TC	SC	TC	SC	TC	SC
		kW	kW	kW	kW	kW	kW	kW	kW	kW	kW	kW	kW	kW	kW
5	10.0	1.16	0.88	1.24	0.97	1.56	1.25	1.70	1.28	1.84	1.30	2.09	1.36	2.28	1.48
	12.0	1.16	0.88	1.24	0.97	1.56	1.25	1.70	1.28	1.84	1.30	2.09	1.36	2.28	1.48
	14.0	1.16	0.88	1.24	0.97	1.56	1.25	1.70	1.28	1.84	1.30	2.09	1.36	2.28	1.48
	16.0	1.16	0.88	1.24	0.97	1.56	1.25	1.70	1.28	1.84	1.30	2.09	1.36	2.28	1.48
	18.0	1.16	0.88	1.24	0.97	1.56	1.25	1.70	1.28	1.84	1.30	2.09	1.36	2.28	1.48
	20.0	1.16	0.88	1.24	0.97	1.56	1.25	1.70	1.28	1.84	1.30	2.09	1.36	2.28	1.48
	21.0	1.16	0.88	1.24	0.97	1.56	1.25	1.70	1.28	1.84	1.30	2.09	1.36	2.28	1.48
	23.0	1.16	0.88	1.24	0.97	1.56	1.25	1.70	1.28	1.84	1.30	2.09	1.36	2.28	1.48
	25.0	1.16	0.88	1.24	0.97	1.56	1.25	1.70	1.28	1.84	1.30	2.09	1.36	2.28	1.48
	27.0	1.16	0.88	1.24	0.97	1.56	1.25	1.70	1.28	1.84	1.30	2.09	1.36	2.28	1.48
	29.0	1.16	0.88	1.24	0.97	1.56	1.25	1.70	1.28	1.84	1.30	2.09	1.36	2.28	1.48
	31.0	1.16	0.88	1.24	0.97	1.56	1.25	1.70	1.28	1.84	1.30	2.09	1.36	2.28	1.48
	33.0	1.16	0.88	1.24	0.97	1.56	1.25	1.70	1.28	1.84	1.30	2.09	1.36	2.28	1.48
	35.0	1.16	0.88	1.24	0.97	1.56	1.25	1.70	1.28	1.84	1.30	2.09	1.36	2.28	1.48
	37.0	1.16	0.88	1.24	0.97	1.56	1.25	1.70	1.28	1.84	1.30	2.09	1.36	2.28	1.48
	39.0	1.16	0.88	1.24	0.97	1.56	1.25	1.70	1.28	1.84	1.30	2.09	1.36	2.28	1.48
	40.0	1.16	0.88	1.24	0.97	1.56	1.25	1.70	1.28	1.84	1.30	2.09	1.36	2.28	1.48
	43.0	1.16	0.88	1.24	0.97	1.56	1.25	1.70	1.28	1.84	1.30	2.09	1.36	2.28	1.48
7	10.0	1.5	1.1	1.6	1.3	2.0	1.6	2.2	1.7	2.4	1.7	2.7	1.8	2.9	1.9
	12.0	1.5	1.1	1.6	1.3	2.0	1.6	2.2	1.7	2.4	1.7	2.7	1.8	2.9	1.9
	14.0	1.5	1.1	1.6	1.3	2.0	1.6	2.2	1.7	2.4	1.7	2.7	1.8	2.9	1.9
	16.0	1.5	1.1	1.6	1.3	2.0	1.6	2.2	1.7	2.4	1.7	2.7	1.8	2.9	1.9
	18.0	1.5	1.1	1.6	1.3	2.0	1.6	2.2	1.7	2.4	1.7	2.7	1.8	2.9	1.9
	20.0	1.5	1.1	1.6	1.3	2.0	1.6	2.2	1.7	2.4	1.7	2.7	1.8	2.9	1.9
	21.0	1.5	1.1	1.6	1.3	2.0	1.6	2.2	1.7	2.4	1.7	2.7	1.8	2.9	1.9
	23.0	1.5	1.1	1.6	1.3	2.0	1.6	2.2	1.7	2.4	1.7	2.7	1.8	2.8	1.9
	25.0	1.5	1.1	1.6	1.3	2.0	1.6	2.2	1.7	2.4	1.7	2.7	1.8	2.8	1.9
	27.0	1.5	1.1	1.6	1.3	2.0	1.6	2.2	1.7	2.4	1.7	2.6	1.8	2.8	1.8
	29.0	1.5	1.1	1.6	1.3	2.0	1.6	2.2	1.7	2.4	1.7	2.6	1.8	2.7	1.8
	31.0	1.5	1.1	1.6	1.3	2.0	1.6	2.2	1.7	2.4	1.7	2.6	1.8	2.7	1.8
	33.0	1.5	1.1	1.6	1.3	2.0	1.6	2.2	1.7	2.4	1.7	2.5	1.8	2.6	1.8
	35.0	1.5	1.1	1.6	1.3	2.0	1.6	2.2	1.7	2.4	1.7	2.5	1.8	2.6	1.8
	37.0	1.5	1.1	1.6	1.3	2.0	1.6	2.2	1.7	2.4	1.7	2.5	1.8	2.6	1.8
	39.0	1.5	1.1	1.6	1.3	2.0	1.6	2.2	1.7	2.4	1.7	2.4	1.8	2.5	1.7
	40.0	1.5	1.1	1.6	1.3	2.0	1.6	2.2	1.7	2.3	1.7	2.4	1.8	2.5	1.7
	43.0	1.5	1.1	1.6	1.3	2.0	1.6	2.2	1.7	2.3	1.7	2.4	1.7	2.4	1.7

Cooling Capacity (kBtu/h)	Outdoor temperature (℃DB)	Indoor temperature (℃ WB/℃ DB)													
		14.0℃WB		16.0℃WB		18.0℃WB		19.0℃WB		20.0℃WB		22.0℃WB		24.0℃WB	
		20℃DB		23℃DB		26℃DB		27℃DB		28℃DB		30℃DB		32℃DB	
		TC	SC	TC	SC	TC	SC	TC	SC	TC	SC	TC	SC	TC	SC
		kW	kW	kW	kW	kW	kW	kW	kW	kW	kW	kW	kW	kW	kW
9	10.0	1.9	1.4	2.0	1.6	2.6	2.1	2.8	2.1	3.0	2.1	3.4	2.2	3.8	2.4
	12.0	1.9	1.4	2.0	1.6	2.6	2.1	2.8	2.1	3.0	2.1	3.4	2.2	3.8	2.4
	14.0	1.9	1.4	2.0	1.6	2.6	2.1	2.8	2.1	3.0	2.1	3.4	2.2	3.8	2.4
	16.0	1.9	1.4	2.0	1.6	2.6	2.1	2.8	2.1	3.0	2.1	3.4	2.2	3.8	2.4
	18.0	1.9	1.4	2.0	1.6	2.6	2.1	2.8	2.1	3.0	2.1	3.4	2.2	3.8	2.4
	20.0	1.9	1.4	2.0	1.6	2.6	2.1	2.8	2.1	3.0	2.1	3.4	2.2	3.7	2.5
	21.0	1.9	1.4	2.0	1.6	2.6	2.1	2.8	2.1	3.0	2.1	3.4	2.2	3.6	2.4
	23.0	1.9	1.4	2.0	1.6	2.6	2.1	2.8	2.1	3.0	2.1	3.4	2.2	3.6	2.4
	25.0	1.9	1.4	2.0	1.6	2.6	2.1	2.8	2.1	3.0	2.1	3.4	2.3	3.5	2.4
	27.0	1.9	1.4	2.0	1.6	2.6	2.1	2.8	2.1	3.0	2.1	3.3	2.3	3.5	2.3
	29.0	1.9	1.4	2.0	1.6	2.6	2.1	2.8	2.1	3.0	2.1	3.3	2.3	3.4	2.3
	31.0	1.9	1.4	2.0	1.6	2.6	2.1	2.8	2.1	3.0	2.1	3.2	2.3	3.4	2.3
	33.0	1.9	1.4	2.0	1.6	2.6	2.1	2.8	2.1	3.0	2.1	3.2	2.3	3.3	2.3
	35.0	1.9	1.4	2.0	1.6	2.6	2.1	2.8	2.1	3.0	2.1	3.2	2.3	3.3	2.3
	37.0	1.9	1.4	2.0	1.6	2.6	2.1	2.8	2.1	3.0	2.2	3.1	2.3	3.2	2.2
	39.0	1.9	1.4	2.0	1.6	2.6	2.1	2.8	2.1	3.0	2.2	3.1	2.2	3.2	2.1
	40.0	1.9	1.4	2.0	1.6	2.6	2.1	2.8	2.1	2.9	2.2	3.1	2.2	3.1	2.2
	43.0	1.9	1.4	2.0	1.6	2.6	2.1	2.8	2.1	2.9	2.1	3.0	2.2	3.1	2.2
12	10.0	2.4	1.8	2.6	2.0	3.2	2.6	3.5	2.6	3.8	2.7	4.3	2.8	4.7	3.0
	12.0	2.4	1.8	2.6	2.0	3.2	2.6	3.5	2.6	3.8	2.7	4.3	2.8	4.7	3.0
	14.0	2.4	1.8	2.6	2.0	3.2	2.6	3.5	2.6	3.8	2.7	4.3	2.8	4.7	3.0
	16.0	2.4	1.8	2.6	2.0	3.2	2.6	3.5	2.6	3.8	2.7	4.3	2.8	4.7	3.0
	18.0	2.4	1.8	2.6	2.0	3.2	2.6	3.5	2.6	3.8	2.7	4.3	2.8	4.7	3.0
	20.0	2.4	1.8	2.6	2.0	3.2	2.6	3.5	2.6	3.8	2.7	4.3	2.8	4.7	3.1
	21.0	2.4	1.8	2.6	2.0	3.2	2.6	3.5	2.6	3.8	2.7	4.3	2.8	4.6	3.0
	23.0	2.4	1.8	2.6	2.0	3.2	2.6	3.5	2.6	3.8	2.7	4.3	2.8	4.5	3.0
	25.0	2.4	1.8	2.6	2.0	3.2	2.6	3.5	2.6	3.8	2.7	4.2	2.8	4.4	3.0
	27.0	2.4	1.8	2.6	2.0	3.2	2.6	3.5	2.6	3.8	2.7	4.2	2.8	4.4	2.9
	29.0	2.4	1.8	2.6	2.0	3.2	2.6	3.5	2.6	3.8	2.7	4.1	2.8	4.3	2.9
	31.0	2.4	1.8	2.6	2.0	3.2	2.6	3.5	2.6	3.8	2.7	4.1	2.8	4.2	2.9
	33.0	2.4	1.8	2.6	2.0	3.2	2.6	3.5	2.6	3.8	2.7	4.0	2.8	4.2	2.8
	35.0	2.4	1.8	2.6	2.0	3.2	2.6	3.5	2.6	3.8	2.7	4.0	2.8	4.1	2.8
	37.0	2.4	1.8	2.6	2.0	3.2	2.6	3.5	2.6	3.8	2.8	3.9	2.8	4.1	2.8
	39.0	2.4	1.8	2.6	2.0	3.2	2.6	3.5	2.6	3.7	2.7	3.9	2.8	4.0	2.6
	40.0	2.4	1.8	2.6	2.0	3.2	2.6	3.5	2.6	3.7	2.7	3.8	2.8	3.9	2.7
	43.0	2.4	1.8	2.6	2.0	3.2	2.6	3.5	2.6	3.6	2.7	3.8	2.8	3.9	2.7

Cooling Capacity (kBtu/h)	Outdoor temperature (℃DB)	Indoor temperature (℃ WB/℃ DB)													
		14.0℃WB		16.0℃WB		18.0℃WB		19.0℃WB		20.0℃WB		22.0℃WB		24.0℃WB	
		20℃DB		23℃DB		26℃DB		27℃DB		28℃DB		30℃DB		32℃DB	
		TC	SC	TC	SC	TC	SC	TC	SC	TC	SC	TC	SC	TC	SC
		kW	kW	kW	kW	kW	kW	kW	kW	kW	kW	kW	kW	kW	kW
15	10.0	3.0	2.3	3.2	2.5	4.0	3.2	4.4	3.3	4.8	3.4	5.4	3.5	5.9	3.8
	12.0	3.0	2.3	3.2	2.5	4.0	3.2	4.4	3.3	4.8	3.4	5.4	3.5	5.9	3.8
	14.0	3.0	2.3	3.2	2.5	4.0	3.2	4.4	3.3	4.8	3.4	5.4	3.5	5.9	3.8
	16.0	3.0	2.3	3.2	2.5	4.0	3.2	4.4	3.3	4.8	3.4	5.4	3.5	5.9	3.8
	18.0	3.0	2.3	3.2	2.5	4.0	3.2	4.4	3.3	4.8	3.4	5.4	3.5	5.9	3.8
	20.0	3.0	2.3	3.2	2.5	4.0	3.2	4.4	3.3	4.8	3.4	5.4	3.5	5.9	3.9
	21.0	3.0	2.3	3.2	2.5	4.0	3.2	4.4	3.3	4.8	3.4	5.4	3.5	5.7	3.8
	23.0	3.0	2.3	3.2	2.5	4.0	3.2	4.4	3.3	4.8	3.4	5.4	3.5	5.6	3.7
	25.0	3.0	2.3	3.2	2.5	4.0	3.2	4.4	3.3	4.8	3.4	5.3	3.6	5.5	3.7
	27.0	3.0	2.3	3.2	2.5	4.0	3.2	4.4	3.3	4.8	3.4	5.2	3.6	5.5	3.7
	29.0	3.0	2.3	3.2	2.5	4.0	3.2	4.4	3.3	4.8	3.4	5.1	3.6	5.4	3.7
	31.0	3.0	2.3	3.2	2.5	4.0	3.2	4.4	3.3	4.8	3.4	5.1	3.6	5.3	3.6
	33.0	3.0	2.3	3.2	2.5	4.0	3.2	4.4	3.3	4.8	3.4	5.1	3.5	5.2	3.6
	35.0	3.0	2.3	3.2	2.5	4.0	3.2	4.4	3.3	4.8	3.4	5.0	3.6	5.2	3.6
	37.0	3.0	2.3	3.2	2.5	4.0	3.2	4.4	3.3	4.8	3.5	4.9	3.5	5.1	3.5
	39.0	3.0	2.3	3.2	2.5	4.0	3.2	4.4	3.3	4.7	3.4	4.8	3.5	5.0	3.3
	40.0	3.0	2.3	3.2	2.5	4.0	3.2	4.4	3.3	4.6	3.4	4.8	3.5	4.9	3.4
	43.0	3.0	2.3	3.2	2.5	4.0	3.2	4.4	3.3	4.5	3.4	4.8	3.5	4.8	3.4
18	10.0	3.6	2.7	3.9	3.0	4.9	3.9	5.3	4.0	5.7	4.1	6.5	4.2	7.1	4.6
	12.0	3.6	2.7	3.9	3.0	4.9	3.9	5.3	4.0	5.7	4.1	6.5	4.2	7.1	4.6
	14.0	3.6	2.7	3.9	3.0	4.9	3.9	5.3	4.0	5.7	4.1	6.5	4.2	7.1	4.6
	16.0	3.6	2.7	3.9	3.0	4.9	3.9	5.3	4.0	5.7	4.1	6.5	4.2	7.1	4.6
	18.0	3.6	2.7	3.9	3.0	4.9	3.9	5.3	4.0	5.7	4.1	6.5	4.2	7.1	4.6
	20.0	3.6	2.7	3.9	3.0	4.9	3.9	5.3	4.0	5.7	4.1	6.5	4.2	7.0	4.7
	21.0	3.6	2.7	3.9	3.0	4.9	3.9	5.3	4.0	5.7	4.1	6.5	4.2	6.9	4.5
	23.0	3.6	2.7	3.9	3.0	4.9	3.9	5.3	4.0	5.7	4.1	6.5	4.2	6.8	4.5
	25.0	3.6	2.7	3.9	3.0	4.9	3.9	5.3	4.0	5.7	4.1	6.4	4.3	6.7	4.5
	27.0	3.6	2.7	3.9	3.0	4.9	3.9	5.3	4.0	5.7	4.1	6.3	4.3	6.6	4.4
	29.0	3.6	2.7	3.9	3.0	4.9	3.9	5.3	4.0	5.7	4.1	6.2	4.3	6.5	4.4
	31.0	3.6	2.7	3.9	3.0	4.9	3.9	5.3	4.0	5.7	4.1	6.1	4.3	6.4	4.4
	33.0	3.6	2.7	3.9	3.0	4.9	3.9	5.3	4.0	5.7	4.1	6.1	4.3	6.3	4.3
	35.0	3.6	2.7	3.9	3.0	4.9	3.9	5.3	4.0	5.7	4.1	6.0	4.3	6.3	4.3
	37.0	3.6	2.7	3.9	3.0	4.9	3.9	5.3	4.0	5.7	4.2	5.9	4.3	6.1	4.2
	39.0	3.6	2.7	3.9	3.0	4.9	3.9	5.3	4.0	5.7	4.1	5.8	4.3	6.0	4.0
	40.0	3.6	2.7	3.9	3.0	4.9	3.9	5.3	4.0	5.6	4.1	5.8	4.2	5.9	4.2
	43.0	3.6	2.7	3.9	3.0	4.9	3.9	5.3	4.0	5.5	4.0	5.7	4.2	5.8	4.1

Cooling Capacity (kBtu/h)	Outdoor temperature (℃DB)	Indoor temperature (℃ WB/℃ DB)													
		14.0℃WB		16.0℃WB		18.0℃WB		19.0℃WB		20.0℃WB		22.0℃WB		24.0℃WB	
		20℃DB		23℃DB		26℃DB		27℃DB		28℃DB		30℃DB		32℃DB	
		TC	SC	TC	SC	TC	SC	TC	SC	TC	SC	TC	SC	TC	SC
		kW	kW	kW	kW	kW	kW	kW	kW	kW	kW	kW	kW	kW	kW
18(Wall Mounted)	10.0	3.5	2.7	3.8	3.0	4.8	3.8	5.2	3.9	5.6	4.0	6.4	4.2	7.0	4.5
	12.0	3.5	2.7	3.8	3.0	4.8	3.8	5.2	3.9	5.6	4.0	6.4	4.2	7.0	4.5
	14.0	3.5	2.7	3.8	3.0	4.8	3.8	5.2	3.9	5.6	4.0	6.4	4.2	7.0	4.5
	16.0	3.5	2.7	3.8	3.0	4.8	3.8	5.2	3.9	5.6	4.0	6.4	4.2	7.0	4.5
	18.0	3.5	2.7	3.8	3.0	4.8	3.8	5.2	3.9	5.6	4.0	6.4	4.2	7.0	4.5
	20.0	3.5	2.7	3.8	3.0	4.8	3.8	5.2	3.9	5.6	4.0	6.4	4.2	6.9	4.6
	21.0	3.5	2.7	3.8	3.0	4.8	3.8	5.2	3.9	5.6	4.0	6.4	4.2	6.8	4.5
	23.0	3.5	2.7	3.8	3.0	4.8	3.8	5.2	3.9	5.6	4.0	6.4	4.2	6.7	4.4
	25.0	3.5	2.7	3.8	3.0	4.8	3.8	5.2	3.9	5.6	4.0	6.3	4.2	6.6	4.4
	27.0	3.5	2.7	3.8	3.0	4.8	3.8	5.2	3.9	5.6	4.0	6.2	4.2	6.5	4.4
	29.0	3.5	2.7	3.8	3.0	4.8	3.8	5.2	3.9	5.6	4.0	6.1	4.2	6.4	4.3
	31.0	3.5	2.7	3.8	3.0	4.8	3.8	5.2	3.9	5.6	4.0	6.0	4.2	6.3	4.3
	33.0	3.5	2.7	3.8	3.0	4.8	3.8	5.2	3.9	5.6	4.0	6.0	4.2	6.2	4.2
	35.0	3.5	2.7	3.8	3.0	4.8	3.8	5.2	3.9	5.6	4.0	5.9	4.2	6.1	4.2
	37.0	3.5	2.7	3.8	3.0	4.8	3.8	5.2	3.9	5.6	4.1	5.8	4.2	6.0	4.2
	39.0	3.5	2.7	3.8	3.0	4.8	3.8	5.2	3.9	5.6	4.1	5.7	4.2	5.9	3.9
	40.0	3.5	2.7	3.8	3.0	4.8	3.8	5.2	3.9	5.5	4.0	5.7	4.1	5.8	4.1
	43.0	3.5	2.7	3.8	3.0	4.8	3.8	5.2	3.9	5.4	4.0	5.6	4.1	5.7	4.0
22	10.0	4.3	3.3	4.6	3.6	5.8	4.6	6.3	4.7	6.8	4.8	7.7	5.0	8.4	5.5
	12.0	4.3	3.3	4.6	3.6	5.8	4.6	6.3	4.7	6.8	4.8	7.7	5.0	8.4	5.5
	14.0	4.3	3.3	4.6	3.6	5.8	4.6	6.3	4.7	6.8	4.8	7.7	5.0	8.4	5.5
	16.0	4.3	3.3	4.6	3.6	5.8	4.6	6.3	4.7	6.8	4.8	7.7	5.0	8.4	5.5
	18.0	4.3	3.3	4.6	3.6	5.8	4.6	6.3	4.7	6.8	4.8	7.7	5.0	8.4	5.5
	20.0	4.3	3.3	4.6	3.6	5.8	4.6	6.3	4.7	6.8	4.8	7.7	5.0	8.4	5.5
	21.0	4.3	3.3	4.6	3.6	5.8	4.6	6.3	4.7	6.8	4.8	7.7	5.0	8.2	5.4
	23.0	4.3	3.3	4.6	3.6	5.8	4.6	6.3	4.7	6.8	4.8	7.7	5.0	8.1	5.3
	25.0	4.3	3.3	4.6	3.6	5.8	4.6	6.3	4.7	6.8	4.8	7.6	5.1	7.9	5.3
	27.0	4.3	3.3	4.6	3.6	5.8	4.6	6.3	4.7	6.8	4.8	7.5	5.1	7.9	5.3
	29.0	4.3	3.3	4.6	3.6	5.8	4.6	6.3	4.7	6.8	4.8	7.4	5.1	7.7	5.3
	31.0	4.3	3.3	4.6	3.6	5.8	4.6	6.3	4.7	6.8	4.8	7.3	5.1	7.6	5.2
	33.0	4.3	3.3	4.6	3.6	5.8	4.6	6.3	4.7	6.8	4.8	7.2	5.1	7.5	5.1
	35.0	4.3	3.3	4.6	3.6	5.8	4.6	6.3	4.7	6.8	4.8	7.2	5.1	7.4	5.1
	37.0	4.3	3.3	4.6	3.6	5.8	4.6	6.3	4.7	6.8	5.0	7.1	5.1	7.3	5.0
	39.0	4.3	3.3	4.6	3.6	5.8	4.6	6.3	4.7	6.7	4.9	6.9	5.1	7.2	4.8
	40.0	4.3	3.3	4.6	3.6	5.8	4.6	6.3	4.7	6.6	4.9	6.9	5.0	7.1	4.9
	43.0	4.3	3.3	4.6	3.6	5.8	4.6	6.3	4.7	6.5	4.8	6.8	5.0	6.9	4.9

Cooling Capacity (kBtu/h)	Outdoor temperature (℃DB)	Indoor temperature (℃ WB/℃ DB)													
		14.0℃WB		16.0℃WB		18.0℃WB		19.0℃WB		20.0℃WB		22.0℃WB		24.0℃WB	
		20℃DB		23℃DB		26℃DB		27℃DB		28℃DB		30℃DB		32℃DB	
		TC	SC	TC	SC	TC	SC	TC	SC	TC	SC	TC	SC	TC	SC
		kW	kW	kW	kW	kW	kW	kW	kW	kW	kW	kW	kW	kW	kW
24	10.0	4.8	3.6	5.1	4.0	6.4	5.2	7.0	5.3	7.6	5.4	8.6	5.6	9.4	6.1
	12.0	4.8	3.6	5.1	4.0	6.4	5.2	7.0	5.3	7.6	5.4	8.6	5.6	9.4	6.1
	14.0	4.8	3.6	5.1	4.0	6.4	5.2	7.0	5.3	7.6	5.4	8.6	5.6	9.4	6.1
	16.0	4.8	3.6	5.1	4.0	6.4	5.2	7.0	5.3	7.6	5.4	8.6	5.6	9.4	6.1
	18.0	4.8	3.6	5.1	4.0	6.4	5.2	7.0	5.3	7.6	5.4	8.6	5.6	9.4	6.1
	20.0	4.8	3.6	5.1	4.0	6.4	5.2	7.0	5.3	7.6	5.4	8.6	5.6	9.3	6.1
	21.0	4.8	3.6	5.1	4.0	6.4	5.2	7.0	5.3	7.6	5.4	8.6	5.6	9.1	6.0
	23.0	4.8	3.6	5.1	4.0	6.4	5.2	7.0	5.3	7.6	5.4	8.6	5.6	9.0	5.9
	25.0	4.8	3.6	5.1	4.0	6.4	5.2	7.0	5.3	7.6	5.4	8.5	5.7	8.8	5.9
	27.0	4.8	3.6	5.1	4.0	6.4	5.2	7.0	5.3	7.6	5.4	8.3	5.7	8.8	5.9
	29.0	4.8	3.6	5.1	4.0	6.4	5.2	7.0	5.3	7.6	5.4	8.2	5.7	8.6	5.9
	31.0	4.8	3.6	5.1	4.0	6.4	5.2	7.0	5.3	7.6	5.4	8.1	5.7	8.5	5.8
	33.0	4.8	3.6	5.1	4.0	6.4	5.2	7.0	5.3	7.6	5.4	8.1	5.6	8.3	5.7
	35.0	4.8	3.6	5.1	4.0	6.4	5.2	7.0	5.3	7.6	5.4	8.0	5.7	8.3	5.7
	37.0	4.8	3.6	5.1	4.0	6.4	5.2	7.0	5.3	7.6	5.5	7.8	5.6	8.1	5.6
	39.0	4.8	3.6	5.1	4.0	6.4	5.2	7.0	5.3	7.5	5.5	7.7	5.6	8.0	5.3
	40.0	4.8	3.6	5.1	4.0	6.4	5.2	7.0	5.3	7.4	5.4	7.6	5.6	7.8	5.5
	43.0	4.8	3.6	5.1	4.0	6.4	5.2	7.0	5.3	7.2	5.3	7.6	5.5	7.7	5.4
30	10.0	6.0	4.5	6.4	5.0	8.1	6.5	8.8	6.6	9.5	6.7	10.8	7.0	11.8	7.7
	12.0	6.0	4.5	6.4	5.0	8.1	6.5	8.8	6.6	9.5	6.7	10.8	7.0	11.8	7.7
	14.0	6.0	4.5	6.4	5.0	8.1	6.5	8.8	6.6	9.5	6.7	10.8	7.0	11.8	7.7
	16.0	6.0	4.5	6.4	5.0	8.1	6.5	8.8	6.6	9.5	6.7	10.8	7.0	11.8	7.7
	18.0	6.0	4.5	6.4	5.0	8.1	6.5	8.8	6.6	9.5	6.7	10.8	7.0	11.8	7.7
	20.0	6.0	4.5	6.4	5.0	8.1	6.5	8.8	6.6	9.5	6.7	10.8	7.0	11.7	7.7
	21.0	6.0	4.5	6.4	5.0	8.1	6.5	8.8	6.6	9.5	6.7	10.8	7.0	11.4	7.6
	23.0	6.0	4.5	6.4	5.0	8.1	6.5	8.8	6.6	9.5	6.7	10.8	7.0	11.3	7.4
	25.0	6.0	4.5	6.4	5.0	8.1	6.5	8.8	6.6	9.5	6.7	10.6	7.1	11.1	7.4
	27.0	6.0	4.5	6.4	5.0	8.1	6.5	8.8	6.6	9.5	6.7	10.5	7.1	11.0	7.4
	29.0	6.0	4.5	6.4	5.0	8.1	6.5	8.8	6.6	9.5	6.7	10.3	7.1	10.8	7.4
	31.0	6.0	4.5	6.4	5.0	8.1	6.5	8.8	6.6	9.5	6.7	10.2	7.1	10.6	7.2
	33.0	6.0	4.5	6.4	5.0	8.1	6.5	8.8	6.6	9.5	6.7	10.1	7.1	10.5	7.1
	35.0	6.0	4.5	6.4	5.0	8.1	6.5	8.8	6.6	9.5	6.7	10.0	7.1	10.4	7.2
	37.0	6.0	4.5	6.4	5.0	8.1	6.5	8.8	6.6	9.5	6.9	9.9	7.1	10.2	7.0
	39.0	6.0	4.5	6.4	5.0	8.1	6.5	8.8	6.6	9.4	6.9	9.7	7.1	10.0	6.6
	40.0	6.0	4.5	6.4	5.0	8.1	6.5	8.8	6.6	9.2	6.8	9.6	7.0	9.9	6.9
	43.0	6.0	4.5	6.4	5.0	8.1	6.5	8.8	6.6	9.1	6.7	9.5	6.9	9.7	6.8

Cooling Capacity (kBtu/h)	Outdoor temperature (℃DB)	Indoor temperature (℃ WB/℃ DB)													
		14.0℃WB		16.0℃WB		18.0℃WB		19.0℃WB		20.0℃WB		22.0℃WB		24.0℃WB	
		20℃DB		23℃DB		26℃DB		27℃DB		28℃DB		30℃DB		32℃DB	
		TC	SC	TC	SC	TC	SC	TC	SC	TC	SC	TC	SC	TC	SC
		kW	kW	kW	kW	kW	kW	kW	kW	kW	kW	kW	kW	kW	kW
36	10.0	7.2	5.5	7.7	6.0	9.8	7.8	10.6	8.0	11.4	8.1	13.0	8.5	14.2	9.2
	12.0	7.2	5.5	7.7	6.0	9.8	7.8	10.6	8.0	11.4	8.1	13.0	8.5	14.2	9.2
	14.0	7.2	5.5	7.7	6.0	9.8	7.8	10.6	8.0	11.4	8.1	13.0	8.5	14.2	9.2
	16.0	7.2	5.5	7.7	6.0	9.8	7.8	10.6	8.0	11.4	8.1	13.0	8.5	14.2	9.2
	18.0	7.2	5.5	7.7	6.0	9.8	7.8	10.6	8.0	11.4	8.1	13.0	8.5	14.2	9.2
	20.0	7.2	5.5	7.7	6.0	9.8	7.8	10.6	8.0	11.4	8.1	13.0	8.5	14.1	9.3
	21.0	7.2	5.5	7.7	6.0	9.8	7.8	10.6	8.0	11.4	8.1	13.0	8.5	13.8	9.1
	23.0	7.2	5.5	7.7	6.0	9.8	7.8	10.6	8.0	11.4	8.1	13.0	8.5	13.6	9.0
	25.0	7.2	5.5	7.7	6.0	9.8	7.8	10.6	8.0	11.4	8.1	12.8	8.6	13.4	8.9
	27.0	7.2	5.5	7.7	6.0	9.8	7.8	10.6	8.0	11.4	8.1	12.6	8.6	13.3	8.9
	29.0	7.2	5.5	7.7	6.0	9.8	7.8	10.6	8.0	11.4	8.1	12.4	8.6	13.0	8.9
	31.0	7.2	5.5	7.7	6.0	9.8	7.8	10.6	8.0	11.4	8.1	12.3	8.6	12.8	8.7
	33.0	7.2	5.5	7.7	6.0	9.8	7.8	10.6	8.0	11.4	8.1	12.2	8.5	12.6	8.6
	35.0	7.2	5.5	7.7	6.0	9.8	7.8	10.6	8.0	11.4	8.1	12.1	8.6	12.5	8.6
	37.0	7.2	5.5	7.7	6.0	9.8	7.8	10.6	8.0	11.4	8.4	11.9	8.5	12.3	8.5
	39.0	7.2	5.5	7.7	6.0	9.8	7.8	10.6	8.0	11.3	8.3	11.7	8.5	12.1	8.0
	40.0	7.2	5.5	7.7	6.0	9.8	7.8	10.6	8.0	11.1	8.2	11.6	8.4	11.9	8.3
	43.0	7.2	5.5	7.7	6.0	9.8	7.8	10.6	8.0	10.9	8.1	11.4	8.4	11.7	8.2
42	10.0	8.4	6.4	9.0	7.0	11.3	9.1	12.3	9.2	13.3	9.4	15.1	9.8	16.5	10.7
	12.0	8.4	6.4	9.0	7.0	11.3	9.1	12.3	9.2	13.3	9.4	15.1	9.8	16.5	10.7
	14.0	8.4	6.4	9.0	7.0	11.3	9.1	12.3	9.2	13.3	9.4	15.1	9.8	16.5	10.7
	16.0	8.4	6.4	9.0	7.0	11.3	9.1	12.3	9.2	13.3	9.4	15.1	9.8	16.5	10.7
	18.0	8.4	6.4	9.0	7.0	11.3	9.1	12.3	9.2	13.3	9.4	15.1	9.8	16.5	10.7
	20.0	8.4	6.4	9.0	7.0	11.3	9.1	12.3	9.2	13.3	9.4	15.1	9.8	16.4	10.8
	21.0	8.4	6.4	9.0	7.0	11.3	9.1	12.3	9.2	13.3	9.4	15.1	9.8	16.0	10.6
	23.0	8.4	6.4	9.0	7.0	11.3	9.1	12.3	9.2	13.3	9.4	15.1	9.8	15.7	10.4
	25.0	8.4	6.4	9.0	7.0	11.3	9.1	12.3	9.2	13.3	9.4	14.9	10.0	15.5	10.4
	27.0	8.4	6.4	9.0	7.0	11.3	9.1	12.3	9.2	13.3	9.4	14.6	9.9	15.4	10.3
	29.0	8.4	6.4	9.0	7.0	11.3	9.1	12.3	9.2	13.3	9.4	14.4	9.9	15.1	10.3
	31.0	8.4	6.4	9.0	7.0	11.3	9.1	12.3	9.2	13.3	9.4	14.3	10.0	14.9	10.1
	33.0	8.4	6.4	9.0	7.0	11.3	9.1	12.3	9.2	13.3	9.4	14.1	9.9	14.6	10.0
	35.0	8.4	6.4	9.0	7.0	11.3	9.1	12.3	9.2	13.3	9.4	14.0	10.0	14.5	10.0
	37.0	8.4	6.4	9.0	7.0	11.3	9.1	12.3	9.2	13.3	9.7	13.8	9.9	14.3	9.8
	39.0	8.4	6.4	9.0	7.0	11.3	9.1	12.3	9.2	13.2	9.6	13.5	9.9	14.0	9.3
	40.0	8.4	6.4	9.0	7.0	11.3	9.1	12.3	9.2	12.9	9.6	13.4	9.8	13.8	9.6
	43.0	8.4	6.4	9.0	7.0	11.3	9.1	12.3	9.2	12.7	9.4	13.3	9.7	13.5	9.5

Cooling Capacity (kBtu/h)	Outdoor temperature (℃DB)	Indoor temperature (℃ WB/℃ DB)													
		14.0℃WB		16.0℃WB		18.0℃WB		19.0℃WB		20.0℃WB		22.0℃WB		24.0℃WB	
		20℃DB		23℃DB		26℃DB		27℃DB		28℃DB		30℃DB		32℃DB	
		TC	SC	TC	SC	TC	SC	TC	SC	TC	SC	TC	SC	TC	SC
		kW	kW	kW	kW	kW	kW	kW	kW	kW	kW	kW	kW	kW	kW
48	10.0	9.6	7.3	10.3	8.0	13.0	10.4	14.1	10.6	15.2	10.8	17.3	11.3	18.9	12.3
	12.0	9.6	7.3	10.3	8.0	13.0	10.4	14.1	10.6	15.2	10.8	17.3	11.3	18.9	12.3
	14.0	9.6	7.3	10.3	8.0	13.0	10.4	14.1	10.6	15.2	10.8	17.3	11.3	18.9	12.3
	16.0	9.6	7.3	10.3	8.0	13.0	10.4	14.1	10.6	15.2	10.8	17.3	11.3	18.9	12.3
	18.0	9.6	7.3	10.3	8.0	13.0	10.4	14.1	10.6	15.2	10.8	17.3	11.3	18.9	12.3
	20.0	9.6	7.3	10.3	8.0	13.0	10.4	14.1	10.6	15.2	10.8	17.3	11.3	18.8	12.4
	21.0	9.6	7.3	10.3	8.0	13.0	10.4	14.1	10.6	15.2	10.8	17.3	11.3	18.3	12.1
	23.0	9.6	7.3	10.3	8.0	13.0	10.4	14.1	10.6	15.2	10.8	17.3	11.3	18.0	11.9
	25.0	9.6	7.3	10.3	8.0	13.0	10.4	14.1	10.6	15.2	10.8	17.1	11.4	17.8	11.9
	27.0	9.6	7.3	10.3	8.0	13.0	10.4	14.1	10.6	15.2	10.8	16.8	11.4	17.6	11.8
	29.0	9.6	7.3	10.3	8.0	13.0	10.4	14.1	10.6	15.2	10.8	16.5	11.4	17.3	11.8
	31.0	9.6	7.3	10.3	8.0	13.0	10.4	14.1	10.6	15.2	10.8	16.4	11.4	17.1	11.6
	33.0	9.6	7.3	10.3	8.0	13.0	10.4	14.1	10.6	15.2	10.8	16.2	11.4	16.8	11.4
	35.0	9.6	7.3	10.3	8.0	13.0	10.4	14.1	10.6	15.2	10.8	16.1	11.4	16.6	11.5
	37.0	9.6	7.3	10.3	8.0	13.0	10.4	14.1	10.6	15.2	11.1	15.8	11.4	16.4	11.3
	39.0	9.6	7.3	10.3	8.0	13.0	10.4	14.1	10.6	15.1	11.0	15.5	11.3	16.1	10.6
	40.0	9.6	7.3	10.3	8.0	13.0	10.4	14.1	10.6	14.8	11.0	15.4	11.2	15.8	11.1
	43.0	9.6	7.3	10.3	8.0	13.0	10.4	14.1	10.6	14.5	10.7	15.2	11.1	15.5	10.9
54	10	10.9	8.3	11.7	9.1	14.7	11.8	16	12	17.3	12.3	19.7	12.8	21.4	13.9
	12	10.9	8.3	11.7	9.1	14.7	11.8	16	12	17.3	12.3	19.7	12.8	21.4	13.9
	14	10.9	8.3	11.7	9.1	14.7	11.8	16	12	17.3	12.3	19.7	12.8	21.4	13.9
	16	10.9	8.3	11.7	9.1	14.7	11.8	16	12	17.3	12.3	19.7	12.8	21.4	13.9
	18	10.9	8.3	11.7	9.1	14.7	11.8	16	12	17.3	12.3	19.7	12.8	21.4	13.9
	20	10.9	8.3	11.7	9.1	14.7	11.8	16	12	17.3	12.3	19.7	12.8	21.3	14
	21	10.9	8.3	11.7	9.1	14.7	11.8	16	12	17.3	12.3	19.7	12.8	20.8	13.7
	23	10.9	8.3	11.7	9.1	14.7	11.8	16	12	17.3	12.3	19.7	12.8	20.5	13.5
	25	10.9	8.3	11.7	9.1	14.7	11.8	16	12	17.3	12.3	19.4	13	20.2	13.5
	27	10.9	8.3	11.7	9.1	14.7	11.8	16	12	17.3	12.3	19	12.9	20	13.4
	29	10.9	8.3	11.7	9.1	14.7	11.8	16	12	17.3	12.3	18.7	12.9	19.7	13.4
	31	10.9	8.3	11.7	9.1	14.7	11.8	16	12	17.3	12.3	18.6	13	19.4	13.2
	33	10.9	8.3	11.7	9.1	14.7	11.8	16	12	17.3	12.3	18.4	12.9	19	12.9
	35	10.9	8.3	11.7	9.1	14.7	11.8	16	12	17.3	12.3	18.2	13	18.9	13
	37	10.9	8.3	11.7	9.1	14.7	11.8	16	12	17.3	12.6	17.9	12.9	18.6	12.8
	39	10.9	8.3	11.7	9.1	14.7	11.8	16	12	17.1	12.5	17.6	12.8	18.2	12.1
	40	10.9	8.3	11.7	9.1	14.7	11.8	16	12	16.8	12.4	17.4	12.7	17.9	12.5
	43	10.9	8.3	11.7	9.1	14.7	11.8	16	12	16.5	12.2	17.3	12.6	17.6	12.3

Cooling Capacity (kBtu/h)	Outdoor temperature (℃DB)	Indoor temperature (℃ WB/℃ DB)													
		14.0℃WB		16.0℃WB		18.0℃WB		19.0℃WB		20.0℃WB		22.0℃WB		24.0℃WB	
		20℃DB		23℃DB		26℃DB		27℃DB		28℃DB		30℃DB		32℃DB	
		TC	SC	TC	SC	TC	SC	TC	SC	TC	SC	TC	SC	TC	SC
		kW	kW	kW	kW	kW	kW	kW	kW	kW	kW	kW	kW	kW	kW
72	10.0	13.7	10.4	14.7	11.5	18.6	14.9	20.2	15.2	21.8	15.5	24.8	16.1	27.1	17.6
	12.0	13.7	10.4	14.7	11.5	18.6	14.9	20.2	15.2	21.8	15.5	24.8	16.1	27.1	17.6
	14.0	13.7	10.4	14.7	11.5	18.6	14.9	20.2	15.2	21.8	15.5	24.8	16.1	27.1	17.6
	16.0	13.7	10.4	14.7	11.5	18.6	14.9	20.2	15.2	21.8	15.5	24.8	16.1	27.1	17.6
	18.0	13.7	10.4	14.7	11.5	18.6	14.9	20.2	15.2	21.8	15.5	24.8	16.1	27.1	17.6
	20.0	13.7	10.4	14.7	11.5	18.6	14.9	20.2	15.2	21.8	15.5	24.8	16.1	26.9	17.7
	21.0	13.7	10.4	14.7	11.5	18.6	14.9	20.2	15.2	21.8	15.5	24.8	16.1	26.3	17.3
	23.0	13.7	10.4	14.7	11.5	18.6	14.9	20.2	15.2	21.8	15.5	24.8	16.1	25.9	17.1
	25.0	13.7	10.4	14.7	11.5	18.6	14.9	20.2	15.2	21.8	15.5	24.4	16.4	25.5	17.1
	27.0	13.7	10.4	14.7	11.5	18.6	14.9	20.2	15.2	21.8	15.5	24.0	16.3	25.3	16.9
	29.0	13.7	10.4	14.7	11.5	18.6	14.9	20.2	15.2	21.8	15.5	23.6	16.3	24.8	16.9
	31.0	13.7	10.4	14.7	11.5	18.6	14.9	20.2	15.2	21.8	15.5	23.4	16.4	24.4	16.6
	33.0	13.7	10.4	14.7	11.5	18.6	14.9	20.2	15.2	21.8	15.5	23.2	16.3	24.0	16.3
	35.0	13.7	10.4	14.7	11.5	18.6	14.9	20.2	15.2	21.8	15.5	23.0	16.3	23.8	16.4
	37.0	13.7	10.4	14.7	11.5	18.6	14.9	20.2	15.2	21.8	15.9	22.6	16.3	23.4	16.2
	39.0	13.7	10.4	14.7	11.5	18.6	14.9	20.2	15.2	21.6	15.8	22.2	16.2	23.0	15.2
	40.0	13.7	10.4	14.7	11.5	18.6	14.9	20.2	15.2	21.2	15.7	22.0	16.1	22.6	15.8
	43.0	13.7	10.4	14.7	11.5	18.6	14.9	20.2	15.2	20.8	15.4	21.8	15.9	22.2	15.6
96	10.0	18.4	14.0	19.7	15.4	24.8	19.9	27.0	20.3	29.2	20.7	33.2	21.6	36.2	23.5
	12.0	18.4	14.0	19.7	15.4	24.8	19.9	27.0	20.3	29.2	20.7	33.2	21.6	36.2	23.5
	14.0	18.4	14.0	19.7	15.4	24.8	19.9	27.0	20.3	29.2	20.7	33.2	21.6	36.2	23.5
	16.0	18.4	14.0	19.7	15.4	24.8	19.9	27.0	20.3	29.2	20.7	33.2	21.6	36.2	23.5
	18.0	18.4	14.0	19.7	15.4	24.8	19.9	27.0	20.3	29.2	20.7	33.2	21.6	36.2	23.5
	20.0	18.4	14.0	19.7	15.4	24.8	19.9	27.0	20.3	29.2	20.7	33.2	21.6	35.9	23.7
	21.0	18.4	14.0	19.7	15.4	24.8	19.9	27.0	20.3	29.2	20.7	33.2	21.6	35.1	23.2
	23.0	18.4	14.0	19.7	15.4	24.8	19.9	27.0	20.3	29.2	20.7	33.2	21.6	34.6	22.8
	25.0	18.4	14.0	19.7	15.4	24.8	19.9	27.0	20.3	29.2	20.7	32.7	21.9	34.0	22.8
	27.0	18.4	14.0	19.7	15.4	24.8	19.9	27.0	20.3	29.2	20.7	32.1	21.8	33.8	22.6
	29.0	18.4	14.0	19.7	15.4	24.8	19.9	27.0	20.3	29.2	20.7	31.6	21.8	33.2	22.6
	31.0	18.4	14.0	19.7	15.4	24.8	19.9	27.0	20.3	29.2	20.7	31.3	21.9	32.7	22.2
	33.0	18.4	14.0	19.7	15.4	24.8	19.9	27.0	20.3	29.2	20.7	31.1	21.7	32.1	21.8
	35.0	18.4	14.0	19.7	15.4	24.8	19.9	27.0	20.3	29.2	20.7	30.8	21.9	31.9	22.0
	37.0	18.4	14.0	19.7	15.4	24.8	19.9	27.0	20.3	29.2	21.3	30.2	21.8	31.3	21.6
	39.0	18.4	14.0	19.7	15.4	24.8	19.9	27.0	20.3	28.9	21.1	29.7	21.7	30.8	20.4
	40.0	18.4	14.0	19.7	15.4	24.8	19.9	27.0	20.3	28.4	21.0	29.4	21.5	30.2	21.2
	43.0	18.4	14.0	19.7	15.4	24.8	19.9	27.0	20.3	27.8	20.6	29.2	21.3	29.7	20.8

Fresh air Processing

Cooling Capacity (kBtu/h)	Outdoor temperature (℃DB)	Indoor temperature (℃ WB/℃ DB)													
		14.0℃WB		16.0℃WB		18.0℃WB		19.0℃WB		20.0℃WB		22.0℃WB		24.0℃WB	
		20℃DB		23℃DB		26℃DB		27℃DB		28℃DB		30℃DB		32℃DB	
		TC	SC	TC	SC	TC	SC	TC	SC	TC	SC	TC	SC	TC	SC
72	10.0	14.3	10.9	15.4	12.0	19.4	15.5	21.1	15.8	22.8	16.2	26.0	16.9	28.3	18.4
	12.0	14.3	10.9	15.4	12.0	19.4	15.5	21.1	15.8	22.8	16.2	26.0	16.9	28.3	18.4
	14.0	14.3	10.9	15.4	12.0	19.4	15.5	21.1	15.8	22.8	16.2	26.0	16.9	28.3	18.4
	16.0	14.3	10.9	15.4	12.0	19.4	15.5	21.1	15.8	22.8	16.2	26.0	16.9	28.3	18.4
	18.0	14.3	10.9	15.4	12.0	19.4	15.5	21.1	15.8	22.8	16.2	26.0	16.9	28.3	18.4
	20.0	14.3	10.9	15.4	12.0	19.4	15.5	21.1	15.8	22.8	16.2	26.0	16.9	28.1	18.5
	21.0	14.3	10.9	15.4	12.0	19.4	15.5	21.1	15.8	22.8	16.2	26.0	16.9	27.4	18.1
	23.0	14.3	10.9	15.4	12.0	19.4	15.5	21.1	15.8	22.8	16.2	26.0	16.9	27.0	17.8
	25.0	14.3	10.9	15.4	12.0	19.4	15.5	21.1	15.8	22.8	16.2	25.5	17.1	26.6	17.8
	27.0	14.3	10.9	15.4	12.0	19.4	15.5	21.1	15.8	22.8	16.2	25.1	17.0	26.4	17.7
	29.0	14.3	10.9	15.4	12.0	19.4	15.5	21.1	15.8	22.8	16.2	24.7	17.0	26.0	17.6
	31.0	14.3	10.9	15.4	12.0	19.4	15.5	21.1	15.8	22.8	16.2	24.5	17.1	25.5	17.4
	33.0	14.3	10.9	15.4	12.0	19.4	15.5	21.1	15.8	22.8	16.2	24.3	17.0	25.1	17.1
	35.0	14.3	10.9	15.4	12.0	19.4	15.5	21.1	15.8	22.8	16.2	24.1	17.1	24.9	17.2
	37.0	14.3	10.9	15.4	12.0	19.4	15.5	21.1	15.8	22.8	16.6	23.6	17.0	24.5	16.9
	39.0	14.3	10.9	15.4	12.0	19.4	15.5	21.1	15.8	22.6	16.5	23.2	16.9	24.1	15.9
	40.0	14.3	10.9	15.4	12.0	19.4	15.5	21.1	15.8	22.2	16.4	23.0	16.8	23.6	16.5
	43.0	14.3	10.9	15.4	12.0	19.4	15.5	21.1	15.8	21.7	16.1	22.8	16.6	23.2	16.2
96	10.0	19.1	14.5	20.5	16.0	25.9	20.7	28.14	21.1	30.4	21.6	34.6	22.5	37.7	24.5
	12.0	19.1	14.5	20.5	16.0	25.9	20.7	28.14	21.1	30.4	21.6	34.6	22.5	37.7	24.5
	14.0	19.1	14.5	20.5	16.0	25.9	20.7	28.14	21.1	30.4	21.6	34.6	22.5	37.7	24.5
	16.0	19.1	14.5	20.5	16.0	25.9	20.7	28.14	21.1	30.4	21.6	34.6	22.5	37.7	24.5
	18.0	19.1	14.5	20.5	16.0	25.9	20.7	28.14	21.1	30.4	21.6	34.6	22.5	37.7	24.5
	20.0	19.1	14.5	20.5	16.0	25.9	20.7	28.14	21.1	30.4	21.6	34.6	22.5	37.4	24.7
	21.0	19.1	14.5	20.5	16.0	25.9	20.7	28.14	21.1	30.4	21.6	34.6	22.5	36.6	24.1
	23.0	19.1	14.5	20.5	16.0	25.9	20.7	28.14	21.1	30.4	21.6	34.6	22.5	36.0	23.8
	25.0	19.1	14.5	20.5	16.0	25.9	20.7	28.14	21.1	30.4	21.6	34.0	22.8	35.5	23.8
	27.0	19.1	14.5	20.5	16.0	25.9	20.7	28.14	21.1	30.4	21.6	33.4	22.7	35.2	23.6
	29.0	19.1	14.5	20.5	16.0	25.9	20.7	28.14	21.1	30.4	21.6	32.9	22.7	34.6	23.5
	31.0	19.1	14.5	20.5	16.0	25.9	20.7	28.14	21.1	30.4	21.6	32.6	22.8	34.0	23.2
	33.0	19.1	14.5	20.5	16.0	25.9	20.7	28.14	21.1	30.4	21.6	32.4	22.7	33.5	22.8
	35.0	19.1	14.5	20.5	16.0	25.9	20.7	28.14	21.1	30.4	21.6	32.1	22.8	33.2	22.9
	37.0	19.1	14.5	20.5	16.0	25.9	20.7	28.14	21.1	30.4	22.2	31.5	22.7	32.6	22.5
	39.0	19.1	14.5	20.5	16.0	25.9	20.7	28.14	21.1	30.1	22.0	31.0	22.6	32.1	21.2
	40.0	19.1	14.5	20.5	16.0	25.9	20.7	28.14	21.1	29.5	21.9	30.7	22.4	31.5	22.1
	43.0	19.1	14.5	20.5	16.0	25.9	20.7	28.14	21.1	29.0	21.4	30.4	22.2	31.0	21.7

4.2 Heating Capacity Correction

TC: Total Capacity; SC: Sensible Capacity

Heating Capacity (kBtu/h)	Outdoor temperature		Indoor temperature℃DB						
			16.0	18.0	20.0	21.0	22.0	24.0	26.0
			TC	TC	TC	TC	TC	TC	TC
	℃DB	℃WB	kW	kW	kW	kW	kW	kW	kW
5	-19.7	-20	1.01	1.01	1.01	1.01	1.01	1.01	0.99
	-14.7	-15.0	1.15	1.15	1.15	1.15	1.15	1.15	1.12
1.29	-12.6	-13.0	1.22	1.22	1.22	1.22	1.22	1.22	1.18
	-10.5	-11.0	1.30	1.30	1.30	1.30	1.30	1.30	1.27
	-9.5	-10.0	1.30	1.30	1.30	1.30	1.30	1.30	1.26
	-8.5	-9.1	1.37	1.37	1.37	1.37	1.37	1.37	1.32
	-7.0	-7.6	1.37	1.37	1.37	1.37	1.37	1.37	1.32
1.52	-5.0	-5.6	1.44	1.44	1.44	1.44	1.44	1.44	1.44
	-3.0	-3.7	1.51	1.51	1.51	1.51	1.51	1.51	1.44
	0.0	-0.7	1.58	1.58	1.58	1.58	1.58	1.51	1.44
	3.0	2.2	1.73	1.73	1.73	1.73	1.66	1.51	1.44
	5.0	4.1	1.73	1.73	1.73	1.73	1.66	1.51	1.44
1.90	7.0	6.0	1.80	1.80	1.80	1.73	1.66	1.51	1.44
	9.0	7.9	1.87	1.87	1.80	1.73	1.66	1.51	1.44
	11.0	9.8	1.94	1.94	1.80	1.73	1.66	1.51	1.44
	13.0	11.8	2.02	1.94	1.80	1.73	1.66	1.51	1.44
	15.0	13.7	2.08	1.94	1.80	1.73	1.66	1.51	1.44
7	-19.7	-20	1.4	1.4	1.4	1.4	1.4	1.4	1.4
	-14.7	-15.0	1.6	1.6	1.6	1.6	1.6	1.6	1.6
	-12.6	-13.0	1.7	1.7	1.7	1.7	1.7	1.7	1.6
	-10.5	-11.0	1.8	1.8	1.8	1.8	1.8	1.8	1.8
	-9.5	-10.0	1.8	1.8	1.8	1.8	1.8	1.8	1.8
	-8.5	-9.1	1.9	1.9	1.9	1.9	1.9	1.9	1.8
	-7.0	-7.6	1.9	1.9	1.9	1.9	1.9	1.9	1.8
	-5.0	-5.6	2.0	2.0	2.0	2.0	2.0	2.0	2.0
	-3.0	-3.7	2.1	2.1	2.1	2.1	2.1	2.1	2.0
	0.0	-0.7	2.2	2.2	2.2	2.2	2.2	2.1	2.0
	3.0	2.2	2.4	2.4	2.4	2.4	2.3	2.1	2.0
	5.0	4.1	2.4	2.4	2.4	2.4	2.3	2.1	2.0
	7.0	6.0	2.5	2.5	2.5	2.4	2.3	2.1	2.0
	9.0	7.9	2.6	2.6	2.5	2.4	2.3	2.1	2.0
	11.0	9.8	2.7	2.7	2.5	2.4	2.3	2.1	2.0
	13.0	11.8	2.8	2.7	2.5	2.4	2.3	2.1	2.0
	15.0	13.7	2.9	2.7	2.5	2.4	2.3	2.1	2.0

Heating Capacity (kBtu/h)	Outdoor temperature		Indoor temperature℃DB						
			16.0	18.0	20.0	21.0	22.0	24.0	26.0
			TC	TC	TC	TC	TC	TC	TC
	℃DB	℃WB	kW	kW	kW	kW	kW	kW	kW
9	-19.7	-20	1.7	1.7	1.7	1.7	1.7	1.7	1.7
	-14.7	-15.0	2.0	2.0	2.0	2.0	2.0	2.0	1.9
	-12.6	-13.0	2.1	2.1	2.1	2.1	2.1	2.1	2.0
	-10.5	-11.0	2.2	2.2	2.2	2.2	2.2	2.2	2.2
	-9.5	-10.0	2.2	2.2	2.2	2.2	2.2	2.2	2.2
	-8.5	-9.1	2.4	2.4	2.4	2.4	2.4	2.4	2.3
	-7.0	-7.6	2.4	2.4	2.4	2.4	2.4	2.4	2.3
	-5.0	-5.6	2.5	2.5	2.5	2.5	2.5	2.5	2.5
	-3.0	-3.7	2.6	2.6	2.6	2.6	2.6	2.6	2.5
	0.0	-0.7	2.7	2.7	2.7	2.7	2.7	2.6	2.5
	3.0	2.2	3.0	3.0	3.0	3.0	2.9	2.6	2.5
	5.0	4.1	3.0	3.0	3.0	3.0	2.9	2.6	2.5
	7.0	6.0	3.1	3.1	3.1	3.0	2.9	2.6	2.5
	9.0	7.9	3.2	3.2	3.1	3.0	2.9	2.6	2.5
	11.0	9.8	3.3	3.3	3.1	3.0	2.9	2.6	2.5
	13.0	11.8	3.5	3.3	3.1	3.0	2.9	2.6	2.5
	15.0	13.7	3.6	3.3	3.1	3.0	2.9	2.6	2.5
9(Wall Mounted 、Floor and Wall Mounted)	-19.7	-20	1.8	1.8	1.8	1.8	1.8	1.8	1.8
	-14.7	-15.0	2.0	2.0	2.0	2.0	2.0	2.0	2.0
	-12.6	-13.0	2.2	2.2	2.2	2.2	2.2	2.2	2.1
	-10.5	-11.0	2.3	2.3	2.3	2.3	2.3	2.3	2.3
	-9.5	-10.0	2.3	2.3	2.3	2.3	2.3	2.3	2.2
	-8.5	-9.1	2.4	2.4	2.4	2.4	2.4	2.4	2.4
	-7.0	-7.6	2.4	2.4	2.4	2.4	2.4	2.4	2.4
	-5.0	-5.6	2.6	2.6	2.6	2.6	2.6	2.6	2.6
	-3.0	-3.7	2.7	2.7	2.7	2.7	2.7	2.7	2.6
	0.0	-0.7	2.8	2.8	2.8	2.8	2.8	2.7	2.6
	3.0	2.2	3.1	3.1	3.1	3.1	3.0	2.7	2.6
	5.0	4.1	3.1	3.1	3.1	3.1	3.0	2.7	2.6
	7.0	6.0	3.2	3.2	3.2	3.1	3.0	2.7	2.6
	9.0	7.9	3.3	3.3	3.2	3.1	3.0	2.7	2.6
	11.0	9.8	3.5	3.5	3.2	3.1	3.0	2.7	2.6
	13.0	11.8	3.6	3.5	3.2	3.1	3.0	2.7	2.6
	15.0	13.7	3.7	3.5	3.2	3.1	3.0	2.7	2.6

Heating Capacity (kBtu/h)	Outdoor temperature		Indoor temperature℃DB						
			16.0	18.0	20.0	21.0	22.0	24.0	26.0
			TC	TC	TC	TC	TC	TC	TC
	℃DB	℃WB	kW	kW	kW	kW	kW	kW	kW
12	-19.7	-20	2.2	2.2	2.2	2.2	2.2	2.2	2.2
	-14.7	-15.0	2.6	2.6	2.6	2.6	2.6	2.6	2.5
	-12.6	-13.0	2.7	2.7	2.7	2.7	2.7	2.7	2.6
	-10.5	-11.0	2.9	2.9	2.9	2.9	2.9	2.9	2.8
	-9.5	-10.0	2.9	2.9	2.9	2.9	2.9	2.9	2.8
	-8.5	-9.1	3.0	3.0	3.0	3.0	3.0	3.0	2.9
	-7.0	-7.6	3.0	3.0	3.0	3.0	3.0	3.0	2.9
	-5.0	-5.6	3.2	3.2	3.2	3.2	3.2	3.2	3.2
	-3.0	-3.7	3.4	3.4	3.4	3.4	3.4	3.4	3.2
	0.0	-0.7	3.5	3.5	3.5	3.5	3.5	3.4	3.2
	3.0	2.2	3.8	3.8	3.8	3.8	3.7	3.4	3.2
	5.0	4.1	3.8	3.8	3.8	3.8	3.7	3.4	3.2
	7.0	6.0	4.0	4.0	4.0	3.8	3.7	3.4	3.2
	9.0	7.9	4.2	4.2	4.0	3.8	3.7	3.4	3.2
	11.0	9.8	4.3	4.3	4.0	3.8	3.7	3.4	3.2
	13.0	11.8	4.5	4.3	4.0	3.8	3.7	3.4	3.2
	15.0	13.7	4.6	4.3	4.0	3.8	3.7	3.4	3.2
15	-19.7	-20	2.8	2.8	2.8	2.8	2.8	2.8	2.8
	-14.7	-15.0	3.2	3.2	3.2	3.2	3.2	3.2	3.1
	-12.6	-13.0	3.4	3.4	3.4	3.4	3.4	3.4	3.3
	-10.5	-11.0	3.6	3.6	3.6	3.6	3.6	3.6	3.5
	-9.5	-10.0	3.6	3.6	3.6	3.6	3.6	3.6	3.5
	-8.5	-9.1	3.8	3.8	3.8	3.8	3.8	3.8	3.7
	-7.0	-7.6	3.8	3.8	3.8	3.8	3.8	3.8	3.7
	-5.0	-5.6	4.0	4.0	4.0	4.0	4.0	4.0	4.0
	-3.0	-3.7	4.2	4.2	4.2	4.2	4.2	4.2	4.0
	0.0	-0.7	4.4	4.4	4.4	4.4	4.4	4.2	4.0
	3.0	2.2	4.8	4.8	4.8	4.8	4.6	4.2	4.0
	5.0	4.1	4.8	4.8	4.8	4.8	4.6	4.2	4.0
	7.0	6.0	5.0	5.0	5.0	4.8	4.6	4.2	4.0
	9.0	7.9	5.2	5.2	5.0	4.8	4.6	4.2	4.0
	11.0	9.8	5.4	5.4	5.0	4.8	4.6	4.2	4.0
	13.0	11.8	5.6	5.4	5.0	4.8	4.6	4.2	4.0
	15.0	13.7	5.8	5.4	5.0	4.8	4.6	4.2	4.0

Heating Capacity (kBtu/h)	Outdoor temperature		Indoor temperature℃DB						
			16.0	18.0	20.0	21.0	22.0	24.0	26.0
			TC	TC	TC	TC	TC	TC	TC
	℃DB	℃WB	kW	kW	kW	kW	kW	kW	kW
18(Wall Mounted 、Floor and Wall Mounted)	-19.7	-20	3.2	3.2	3.2	3.2	3.2	3.2	3.2
	-14.7	-15.0	3.7	3.7	3.7	3.7	3.7	3.7	3.6
	-12.6	-13.0	3.9	3.9	3.9	3.9	3.9	3.9	3.8
	-10.5	-11.0	4.2	4.2	4.2	4.2	4.2	4.2	4.1
	-9.5	-10.0	4.2	4.2	4.2	4.2	4.2	4.2	4.1
	-8.5	-9.1	4.4	4.4	4.4	4.4	4.4	4.4	4.3
	-7.0	-7.6	4.4	4.4	4.4	4.4	4.4	4.4	4.3
	-5.0	-5.6	4.6	4.6	4.6	4.6	4.6	4.6	4.6
	-3.0	-3.7	4.9	4.9	4.9	4.9	4.9	4.9	4.6
	0.0	-0.7	5.1	5.1	5.1	5.1	5.1	4.9	4.6
	3.0	2.2	5.6	5.6	5.6	5.6	5.3	4.9	4.6
	5.0	4.1	5.6	5.6	5.6	5.6	5.3	4.9	4.6
	7.0	6.0	5.8	5.8	5.8	5.6	5.3	4.9	4.6
	9.0	7.9	6.0	6.0	5.8	5.6	5.3	4.9	4.6
	11.0	9.8	6.3	6.3	5.8	5.6	5.3	4.9	4.6
	13.0	11.8	6.5	6.3	5.8	5.6	5.3	4.9	4.6
	15.0	13.7	6.7	6.3	5.8	5.6	5.3	4.9	4.6
18	-19.7	-20	3.3	3.3	3.3	3.3	3.3	3.3	3.3
	-14.7	-15.0	3.8	3.8	3.8	3.8	3.8	3.8	3.7
	-12.6	-13.0	4.0	4.0	4.0	4.0	4.0	4.0	3.9
	-10.5	-11.0	4.2	4.2	4.2	4.2	4.2	4.2	4.2
	-9.5	-10.0	4.2	4.2	4.2	4.2	4.2	4.2	4.1
	-8.5	-9.1	4.5	4.5	4.5	4.5	4.5	4.5	4.3
	-7.0	-7.6	4.5	4.5	4.5	4.5	4.5	4.5	4.3
	-5.0	-5.6	4.7	4.7	4.7	4.7	4.7	4.7	4.7
	-3.0	-3.7	5.0	5.0	5.0	5.0	5.0	5.0	4.7
	0.0	-0.7	5.2	5.2	5.2	5.2	5.2	5.0	4.7
	3.0	2.2	5.7	5.7	5.7	5.7	5.4	5.0	4.7
	5.0	4.1	5.7	5.7	5.7	5.7	5.4	5.0	4.7
	7.0	6.0	5.9	5.9	5.9	5.7	5.4	5.0	4.7
	9.0	7.9	6.1	6.1	5.9	5.7	5.4	5.0	4.7
	11.0	9.8	6.4	6.4	5.9	5.7	5.4	5.0	4.7
	13.0	11.8	6.6	6.4	5.9	5.7	5.4	5.0	4.7
	15.0	13.7	6.8	6.4	5.9	5.7	5.4	5.0	4.7

Heating Capacity (kBtu/h)	Outdoor temperature		Indoor temperature℃DB						
			16.0	18.0	20.0	21.0	22.0	24.0	26.0
			TC	TC	TC	TC	TC	TC	TC
	℃DB	℃WB	kW	kW	kW	kW	kW	kW	kW
22	-19.7	-20	4.0	4.0	4.0	4.0	4.0	4.0	3.9
	-14.7	-15.0	4.5	4.5	4.5	4.5	4.5	4.5	4.4
	-12.6	-13.0	4.8	4.8	4.8	4.8	4.8	4.8	4.7
	-10.5	-11.0	5.1	5.1	5.1	5.1	5.1	5.1	5.0
	-9.5	-10.0	5.1	5.1	5.1	5.1	5.1	5.1	5.0
	-8.5	-9.1	5.4	5.4	5.4	5.4	5.4	5.4	5.2
	-7.0	-7.6	5.4	5.4	5.4	5.4	5.4	5.4	5.2
	-5.0	-5.6	5.7	5.7	5.7	5.7	5.7	5.7	5.7
	-3.0	-3.7	6.0	6.0	6.0	6.0	6.0	6.0	5.7
	0.0	-0.7	6.2	6.2	6.2	6.2	6.2	6.0	5.7
	3.0	2.2	6.8	6.8	6.8	6.8	6.5	6.0	5.7
	5.0	4.1	6.8	6.8	6.8	6.8	6.5	6.0	5.7
	7.0	6.0	7.1	7.1	7.1	6.8	6.5	6.0	5.7
	9.0	7.9	7.4	7.4	7.1	6.8	6.5	6.0	5.7
	11.0	9.8	7.7	7.7	7.1	6.8	6.5	6.0	5.7
	13.0	11.8	8.0	7.7	7.1	6.8	6.5	6.0	5.7
	15.0	13.7	8.2	7.7	7.1	6.8	6.5	6.0	5.7
24(Wall Mounted)	-19.7	-20	4.2	4.2	4.2	4.2	4.2	4.2	4.1
	-14.7	-15.0	4.8	4.8	4.8	4.8	4.8	4.8	4.7
	-12.6	-13.0	5.1	5.1	5.1	5.1	5.1	5.1	4.9
	-10.5	-11.0	5.4	5.4	5.4	5.4	5.4	5.4	5.3
	-9.5	-10.0	5.4	5.4	5.4	5.4	5.4	5.4	5.3
	-8.5	-9.1	5.7	5.7	5.7	5.7	5.7	5.7	5.5
	-7.0	-7.6	5.7	5.7	5.7	5.7	5.7	5.7	5.5
	-5.0	-5.6	6.0	6.0	6.0	6.0	6.0	6.0	6.0
	-3.0	-3.7	6.3	6.3	6.3	6.3	6.3	6.3	6.0
	0.0	-0.7	6.6	6.6	6.6	6.6	6.6	6.3	6.0
	3.0	2.2	7.2	7.2	7.2	7.2	6.9	6.3	6.0
	5.0	4.1	7.2	7.2	7.2	7.2	6.9	6.3	6.0
	7.0	6.0	7.5	7.5	7.5	7.2	6.9	6.3	6.0
	9.0	7.9	7.8	7.8	7.5	7.2	6.9	6.3	6.0
	11.0	9.8	8.1	8.1	7.5	7.2	6.9	6.3	6.0
	13.0	11.8	8.4	8.1	7.5	7.2	6.9	6.3	6.0
	15.0	13.7	8.7	8.1	7.5	7.2	6.9	6.3	6.0

Heating Capacity (kBtu/h)	Outdoor temperature		Indoor temperature℃DB						
			16.0	18.0	20.0	21.0	22.0	24.0	26.0
			TC	TC	TC	TC	TC	TC	TC
	℃DB	℃WB	kW	kW	kW	kW	kW	kW	kW
24	-19.7	-20	4.4	4.4	4.4	4.4	4.4	4.4	4.4
	-14.7	-15.0	5.1	5.1	5.1	5.1	5.1	5.1	4.9
	-12.6	-13.0	5.4	5.4	5.4	5.4	5.4	5.4	5.2
	-10.5	-11.0	5.7	5.7	5.7	5.7	5.7	5.7	5.6
	-9.5	-10.0	5.7	5.7	5.7	5.7	5.7	5.7	5.5
	-8.5	-9.1	6.0	6.0	6.0	6.0	6.0	6.0	5.8
	-7.0	-7.6	6.0	6.0	6.0	6.0	6.0	6.0	5.8
	-5.0	-5.6	6.3	6.3	6.3	6.3	6.3	6.3	6.3
	-3.0	-3.7	6.6	6.6	6.6	6.6	6.6	6.6	6.3
	0.0	-0.7	7.0	7.0	7.0	7.0	7.0	6.6	6.3
	3.0	2.2	7.6	7.6	7.6	7.6	7.3	6.6	6.3
	5.0	4.1	7.6	7.6	7.6	7.6	7.3	6.6	6.3
	7.0	6.0	7.9	7.9	7.9	7.6	7.3	6.6	6.3
	9.0	7.9	8.2	8.2	7.9	7.6	7.3	6.6	6.3
	11.0	9.8	8.5	8.5	7.9	7.6	7.3	6.6	6.3
	13.0	11.8	8.9	8.5	7.9	7.6	7.3	6.6	6.3
	15.0	13.7	9.1	8.5	7.9	7.6	7.3	6.6	6.3
30	-19.7	-20	5.6	5.6	5.6	5.6	5.6	5.6	5.5
	-14.7	-15.0	6.4	6.4	6.4	6.4	6.4	6.4	6.2
	-12.6	-13.0	6.8	6.8	6.8	6.8	6.8	6.8	6.6
	-10.5	-11.0	7.2	7.2	7.2	7.2	7.2	7.2	7.0
	-9.5	-10.0	7.2	7.2	7.2	7.2	7.2	7.2	7.0
	-8.5	-9.1	7.6	7.6	7.6	7.6	7.6	7.6	7.4
	-7.0	-7.6	7.6	7.6	7.6	7.6	7.6	7.6	7.4
	-5.0	-5.6	8.0	8.0	8.0	8.0	8.0	8.0	8.0
	-3.0	-3.7	8.4	8.4	8.4	8.4	8.4	8.4	8.0
	0.0	-0.7	8.8	8.8	8.8	8.8	8.8	8.4	8.0
	3.0	2.2	9.6	9.6	9.6	9.6	9.2	8.4	8.0
	5.0	4.1	9.6	9.6	9.6	9.6	9.2	8.4	8.0
	7.0	6.0	10.0	10.0	10.0	9.6	9.2	8.4	8.0
	9.0	7.9	10.4	10.4	10.0	9.6	9.2	8.4	8.0
	11.0	9.8	10.8	10.8	10.0	9.6	9.2	8.4	8.0
	13.0	11.8	11.2	10.8	10.0	9.6	9.2	8.4	8.0
	15.0	13.7	11.6	10.8	10.0	9.6	9.2	8.4	8.0

Heating Capacity (kBtu/h)	Outdoor temperature		Indoor temperature℃DB						
			16.0	18.0	20.0	21.0	22.0	24.0	26.0
			TC	TC	TC	TC	TC	TC	TC
	℃DB	℃WB	kW	kW	kW	kW	kW	kW	kW
36	-19.7	-20	6.6	6.6	6.6	6.6	6.6	6.6	6.5
	-14.7	-15.0	7.5	7.5	7.5	7.5	7.5	7.5	7.3
	-12.6	-13.0	8.0	8.0	8.0	8.0	8.0	8.0	7.7
	-10.5	-11.0	8.4	8.4	8.4	8.4	8.4	8.4	8.2
	-9.5	-10.0	8.4	8.4	8.4	8.4	8.4	8.4	8.2
	-8.5	-9.1	8.9	8.9	8.9	8.9	8.9	8.9	8.6
	-7.0	-7.6	8.9	8.9	8.9	8.9	8.9	8.9	8.6
	-5.0	-5.6	9.4	9.4	9.4	9.4	9.4	9.4	9.4
	-3.0	-3.7	9.8	9.8	9.8	9.8	9.8	9.8	9.4
	0.0	-0.7	10.3	10.3	10.3	10.3	10.3	9.8	9.4
	3.0	2.2	11.2	11.2	11.2	11.2	10.8	9.8	9.4
	5.0	4.1	11.2	11.2	11.2	11.2	10.8	9.8	9.4
	7.0	6.0	11.7	11.7	11.7	11.2	10.8	9.8	9.4
	9.0	7.9	12.2	12.2	11.7	11.2	10.8	9.8	9.4
	11.0	9.8	12.6	12.6	11.7	11.2	10.8	9.8	9.4
	13.0	11.8	13.1	12.6	11.7	11.2	10.8	9.8	9.4
	15.0	13.7	13.5	12.6	11.7	11.2	10.8	9.8	9.4
42	-19.7	-20	7.7	7.7	7.7	7.7	7.7	7.7	7.6
	-14.7	-15.0	8.8	8.8	8.8	8.8	8.8	8.8	8.6
	-12.6	-13.0	9.4	9.4	9.4	9.4	9.4	9.4	9.1
	-10.5	-11.0	9.9	9.9	9.9	9.9	9.9	9.9	9.7
	-9.5	-10.0	9.9	9.9	9.9	9.9	9.9	9.9	9.7
	-8.5	-9.1	10.5	10.5	10.5	10.5	10.5	10.5	10.2
	-7.0	-7.6	10.5	10.5	10.5	10.5	10.5	10.5	10.2
	-5.0	-5.6	11.0	11.0	11.0	11.0	11.0	11.0	11.0
	-3.0	-3.7	11.6	11.6	11.6	11.6	11.6	11.6	11.0
	0.0	-0.7	12.1	12.1	12.1	12.1	12.1	11.6	11.0
	3.0	2.2	13.2	13.2	13.2	13.2	12.7	11.6	11.0
	5.0	4.1	13.2	13.2	13.2	13.2	12.7	11.6	11.0
	7.0	6.0	13.8	13.8	13.8	13.2	12.7	11.6	11.0
	9.0	7.9	14.4	14.4	13.8	13.2	12.7	11.6	11.0
	11.0	9.8	14.9	14.9	13.8	13.2	12.7	11.6	11.0
	13.0	11.8	15.5	14.9	13.8	13.2	12.7	11.6	11.0
	15.0	13.7	16.0	14.9	13.8	13.2	12.7	11.6	11.0

Heating Capacity (kBtu/h)	Outdoor temperature		Indoor temperature℃DB						
			16.0	18.0	20.0	21.0	22.0	24.0	26.0
			TC	TC	TC	TC	TC	TC	TC
	℃DB	℃WB	kW	kW	kW	kW	kW	kW	kW
48	-19.7	-20	8.8	8.8	8.8	8.8	8.8	8.8	8.7
	-14.7	-15.0	10.1	10.1	10.1	10.1	10.1	10.1	9.9
	-12.6	-13.0	10.7	10.7	10.7	10.7	10.7	10.7	10.4
	-10.5	-11.0	11.4	11.4	11.4	11.4	11.4	11.4	11.1
	-9.5	-10.0	11.4	11.4	11.4	11.4	11.4	11.4	11.1
	-8.5	-9.1	12.0	12.0	12.0	12.0	12.0	12.0	11.6
	-7.0	-7.6	12.0	12.0	12.0	12.0	12.0	12.0	11.6
	-5.0	-5.6	12.6	12.6	12.6	12.6	12.6	12.6	12.6
	-3.0	-3.7	13.3	13.3	13.3	13.3	13.3	13.3	12.6
	0.0	-0.7	13.9	13.9	13.9	13.9	13.9	13.3	12.6
	3.0	2.2	15.2	15.2	15.2	15.2	14.6	13.3	12.6
	5.0	4.1	15.2	15.2	15.2	15.2	14.6	13.3	12.6
	7.0	6.0	15.8	15.8	15.8	15.2	14.6	13.3	12.6
	9.0	7.9	16.4	16.4	15.8	15.2	14.6	13.3	12.6
	11.0	9.8	17.1	17.1	15.8	15.2	14.6	13.3	12.6
	13.0	11.8	17.7	17.1	15.8	15.2	14.6	13.3	12.6
	15.0	13.7	18.3	17.1	15.8	15.2	14.6	13.3	12.6
54	-19.7	-20	9.8	9.8	9.8	9.8	9.8	9.8	9.7
	-14.7	-15	11.2	11.2	11.2	11.2	11.2	11.2	10.9
	-12.6	-13	11.9	11.9	11.9	11.9	11.9	11.9	11.5
	-10.5	-11	12.6	12.6	12.6	12.6	12.6	12.6	12.3
	-9.5	-10	12.6	12.6	12.6	12.6	12.6	12.6	12.3
	-8.5	-9.1	13.3	13.3	13.3	13.3	13.3	13.3	12.9
	-7	-7.6	13.3	13.3	13.3	13.3	13.3	13.3	12.9
	-5	-5.6	14	14	14	14	14	14	14
	-3	-3.7	14.7	14.7	14.7	14.7	14.7	14.7	14
	0	-0.7	15.4	15.4	15.4	15.4	15.4	14.7	14
	3	2.2	16.8	16.8	16.8	16.8	16.1	14.7	14
	5	4.1	16.8	16.8	16.8	16.8	16.1	14.7	14
	7	6	17.5	17.5	17.5	16.8	16.1	14.7	14
	9	7.9	18.2	18.2	17.5	16.8	16.1	14.7	14
	11	9.8	18.9	18.9	17.5	16.8	16.1	14.7	14
	13	11.8	19.7	18.9	17.5	16.8	16.1	14.7	14
	15	13.7	20.2	18.9	17.5	16.8	16.1	14.7	14

Heating Capacity (kBtu/h)	Outdoor temperature		Indoor temperature℃DB						
			16.0	18.0	20.0	21.0	22.0	24.0	26.0
			TC	TC	TC	TC	TC	TC	TC
	℃DB	℃WB	kW	kW	kW	kW	kW	kW	kW
72	-19.7	-20	12.7	12.7	12.7	12.7	12.7	12.7	12.5
	-14.7	-15.0	14.5	14.5	14.5	14.5	14.5	14.5	14.1
	-12.6	-13.0	15.4	15.4	15.4	15.4	15.4	15.4	14.8
	-10.5	-11.0	16.3	16.3	16.3	16.3	16.3	16.3	15.9
	-9.5	-10.0	16.3	16.3	16.3	16.3	16.3	16.3	15.9
	-8.5	-9.1	17.2	17.2	17.2	17.2	17.2	17.2	16.6
	-7.0	-7.6	17.2	17.2	17.2	17.2	17.2	17.2	16.6
	-5.0	-5.6	18.1	18.1	18.1	18.1	18.1	18.1	18.1
	-3.0	-3.7	19.0	19.0	19.0	19.0	19.0	19.0	18.1
	0.0	-0.7	19.9	19.9	19.9	19.9	19.9	19.0	18.1
	3.0	2.2	21.7	21.7	21.7	21.7	20.8	19.0	18.1
	5.0	4.1	21.7	21.7	21.7	21.7	20.8	19.0	18.1
	7.0	6.0	22.6	22.6	22.6	21.7	20.8	19.0	18.1
	9.0	7.9	23.5	23.5	22.6	21.7	20.8	19.0	18.1
	11.0	9.8	24.4	24.4	22.6	21.7	20.8	19.0	18.1
	13.0	11.8	25.4	24.4	22.6	21.7	20.8	19.0	18.1
	15.0	13.7	26.1	24.4	22.6	21.7	20.8	19.0	18.1
96	-19.7	-20	16.9	16.9	16.9	16.9	16.9	16.9	16.7
	-14.7	-15.0	19.3	19.3	19.3	19.3	19.3	19.3	18.8
	-12.6	-13.0	20.5	20.5	20.5	20.5	20.5	20.5	19.8
	-10.5	-11.0	21.7	21.7	21.7	21.7	21.7	21.7	21.3
	-9.5	-10.0	21.7	21.7	21.7	21.7	21.7	21.7	21.2
	-8.5	-9.1	23.0	23.0	23.0	23.0	23.0	23.0	22.2
	-7.0	-7.6	23.0	23.0	23.0	23.0	23.0	23.0	22.2
	-5.0	-5.6	24.2	24.2	24.2	24.2	24.2	24.2	24.2
	-3.0	-3.7	25.4	25.4	25.4	25.4	25.4	25.4	24.2
	0.0	-0.7	26.6	26.6	26.6	26.6	26.6	25.4	24.2
	3.0	2.2	29.0	29.0	29.0	29.0	27.8	25.4	24.2
	5.0	4.1	29.0	29.0	29.0	29.0	27.8	25.4	24.2
	7.0	6.0	30.2	30.2	30.2	29.0	27.8	25.4	24.2
	9.0	7.9	31.4	31.4	30.2	29.0	27.8	25.4	24.2
	11.0	9.8	32.6	32.6	30.2	29.0	27.8	25.4	24.2
	13.0	11.8	33.9	32.6	30.2	29.0	27.8	25.4	24.2
	15.0	13.7	34.9	32.6	30.2	29.0	27.8	25.4	24.2

Fresh air Processing

Heating Capacity (kBtu/h)	Outdoor temperature		Indoor temperature℃DB						
			16.0	18.0	20.0	21.0	22.0	24.0	26.0
			TC	TC	TC	TC	TC	TC	TC
	℃DB	℃WB	kW	kW	kW	kW	kW	kW	kW
72	-19.7	-20	9.0	9.0	9.03	9.0	9.0	9.0	8.9
	-14.7	-15.0	10.3	10.3	10.32	10.3	10.3	10.3	10.1
	-12.6	-13.0	11.0	11.0	10.96	11.0	11.0	11.0	10.6
	-10.5	-11.0	11.6	11.6	11.61	11.6	11.6	11.6	11.3
	-9.5	-10.0	11.6	11.6	11.61	11.6	11.6	11.6	11.3
	-8.5	-9.1	12.3	12.3	12.25	12.3	12.3	12.3	11.9
	-7.0	-7.6	12.3	12.3	12.25	12.3	12.3	12.3	11.9
	-5.0	-5.6	12.9	12.9	12.90	12.9	12.9	12.9	12.9
	-3.0	-3.7	13.5	13.5	13.54	13.5	13.5	13.6	12.9
	0.0	-0.7	14.2	14.2	14.19	14.2	14.2	13.6	12.9
	3.0	2.2	15.5	15.5	15.48	15.5	14.9	13.6	12.9
	5.0	4.1	15.5	15.5	15.48	15.5	14.9	13.6	12.9
	7.0	6.0	16.1	16.1	16.12	15.5	14.9	13.6	12.9
	9.0	7.9	16.8	16.8	16.12	15.5	14.9	13.6	12.9
	11.0	9.8	17.4	17.4	16.12	15.5	14.9	13.6	12.9
	13.0	11.8	18.1	17.4	16.12	15.5	14.9	13.6	12.9
	15.0	13.7	18.6	17.4	16.12	15.5	14.9	13.6	12.9
96	-19.7	-20	11.2	11.2	11.16	11.2	11.2	11.2	11.0
	-14.7	-15.0	12.8	12.8	12.76	12.8	12.8	12.8	12.4
	-12.6	-13.0	13.6	13.6	13.55	13.6	13.6	13.6	13.1
	-10.5	-11.0	14.3	14.3	14.35	14.3	14.3	14.3	14.0
	-9.5	-10.0	14.3	14.3	14.35	14.3	14.3	14.3	14.0
	-8.5	-9.1	15.1	15.1	15.15	15.1	15.1	15.1	14.7
	-7.0	-7.6	15.1	15.1	15.15	15.1	15.1	15.1	14.7
	-5.0	-5.6	15.9	15.9	15.94	15.9	15.9	15.9	15.9
	-3.0	-3.7	16.7	16.7	16.74	16.7	16.7	16.8	15.9
	0.0	-0.7	17.5	17.5	17.54	17.5	17.5	16.8	15.9
	3.0	2.2	19.1	19.1	19.13	19.1	18.4	16.8	15.9
	5.0	4.1	19.1	19.1	19.13	19.1	18.4	16.8	15.9
	7.0	6.0	19.9	19.9	19.93	19.1	18.4	16.8	15.9
	9.0	7.9	20.7	20.7	19.93	19.1	18.4	16.8	15.9
	11.0	9.8	21.5	21.5	19.93	19.1	18.4	16.8	15.9
	13.0	11.8	22.4	21.5	19.93	19.1	18.4	16.8	15.9
	15.0	13.7	23.0	21.5	19.9	19.1	18.4	16.8	15.9

5. Unit Noise Curves

5.1 Low Static Pressure Duct Type Indoor Unit

5.1.1 GMV-ND**PLS/A-T(U)

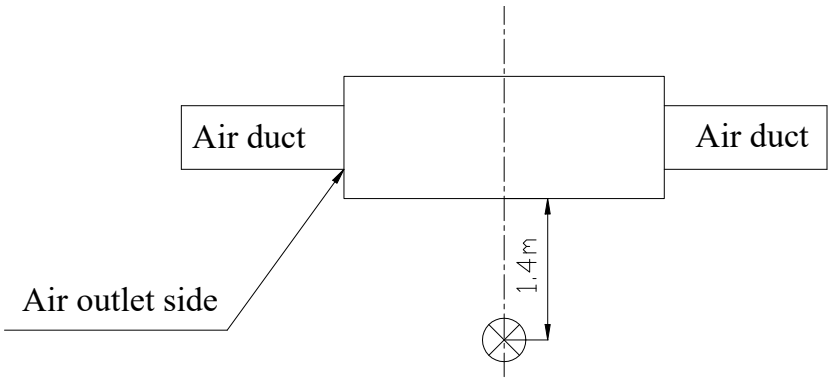

Transandient meter of sound level meter

NOTICE !

a The noise level is measured in the semi-anechoic room. It will be slightly higher due to change of the environment during actual operation.

b The noise level is measured under the standard test condition.

c The noise level is measured under the condition of rear air return. The noise level will be a little higher if the lower air return mode is adopted.

Model 07、09

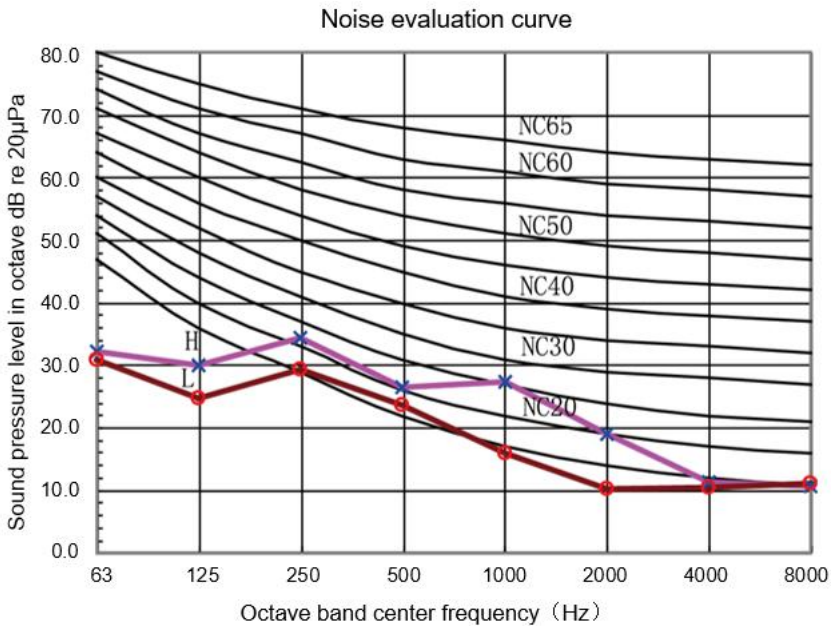

Model 12

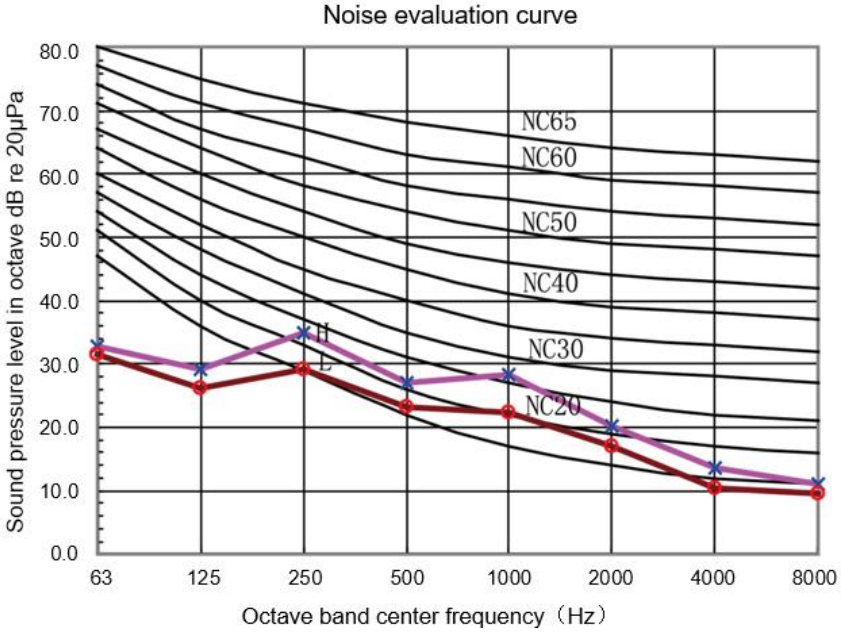

Model 14

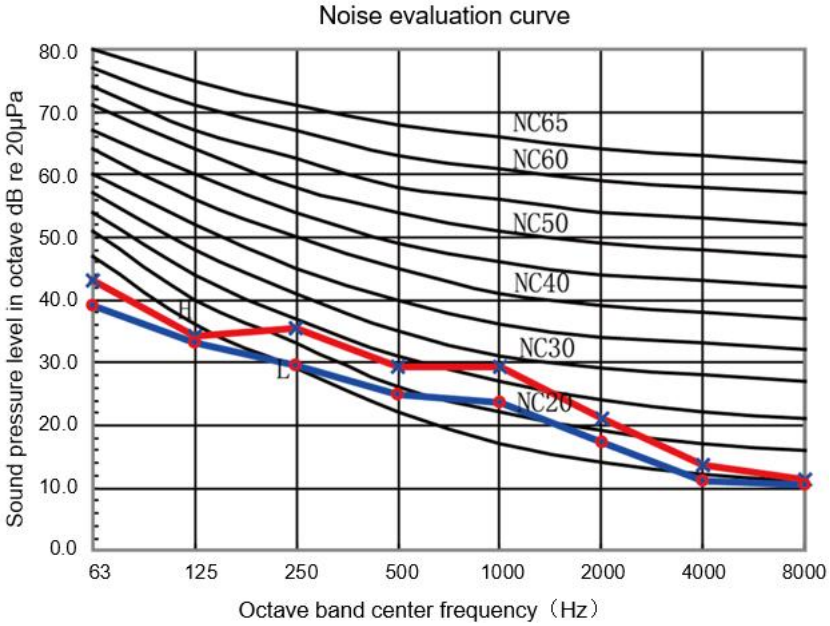

Model 18、22/24

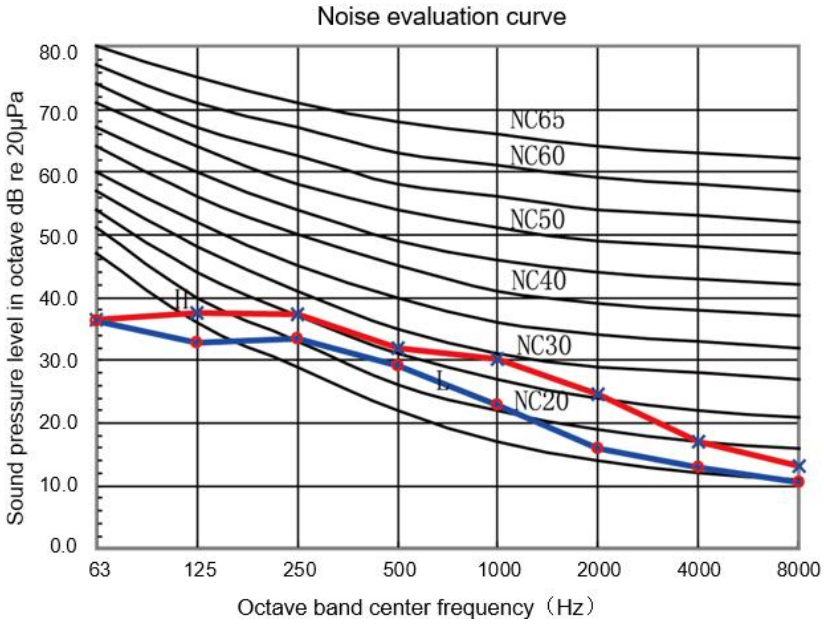

5.1.2 GMV-ND**PLS/B1-T(U)

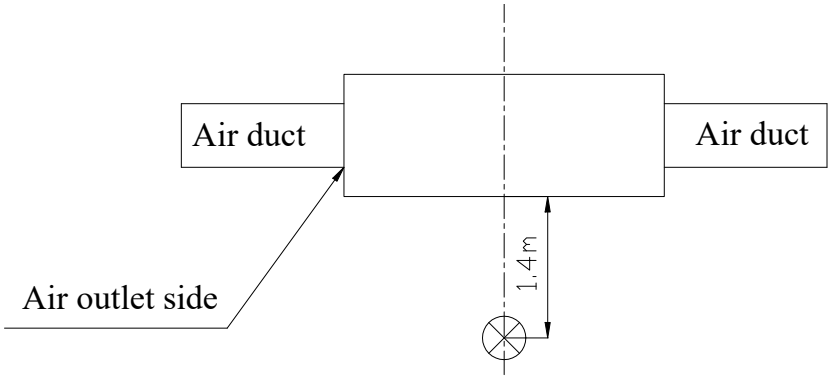

Transandient meter of sound level meter

Notes:

a The noise level is measured in the semi-anechoic room. It will be slightly higher due to change of the environment during actual operation.

b The noise level is measured under the standard test condition.

c The noise level is measured under the condition of rear air return. The noise level will be a little higher if the lower air return mode is adopted.

Model GMV-ND05/07/09PLS/B1-T(U)

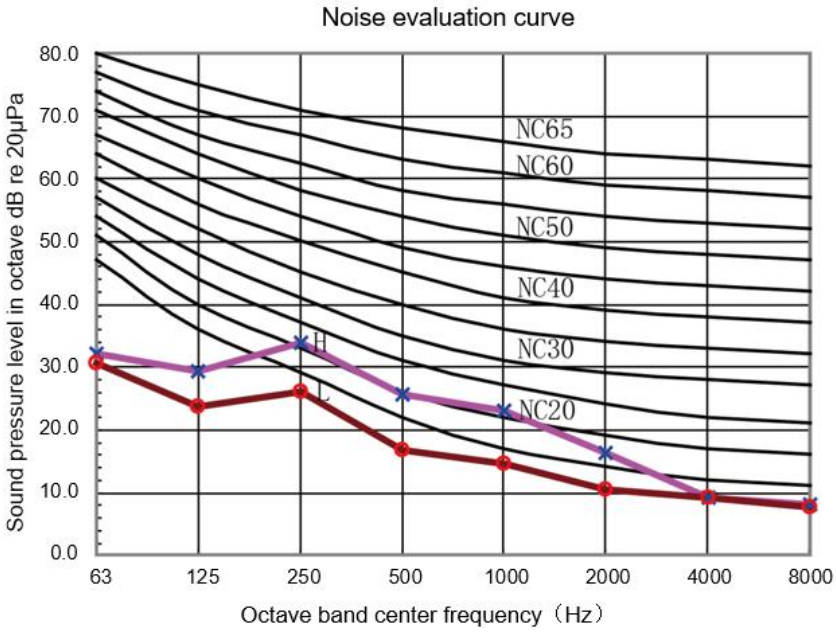

Model GMV-ND12PLS/B1-T(U)

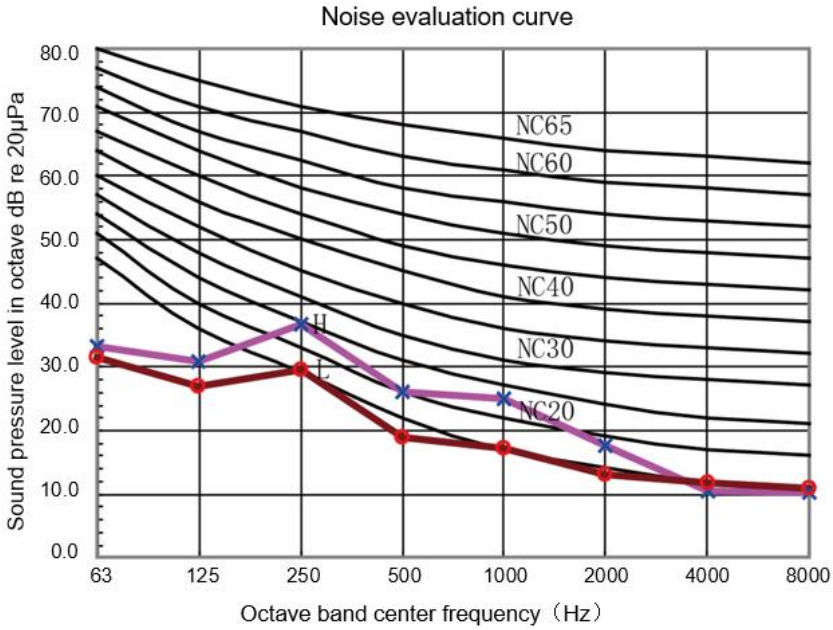

Model GMV-ND14PLS/B1-T(U)

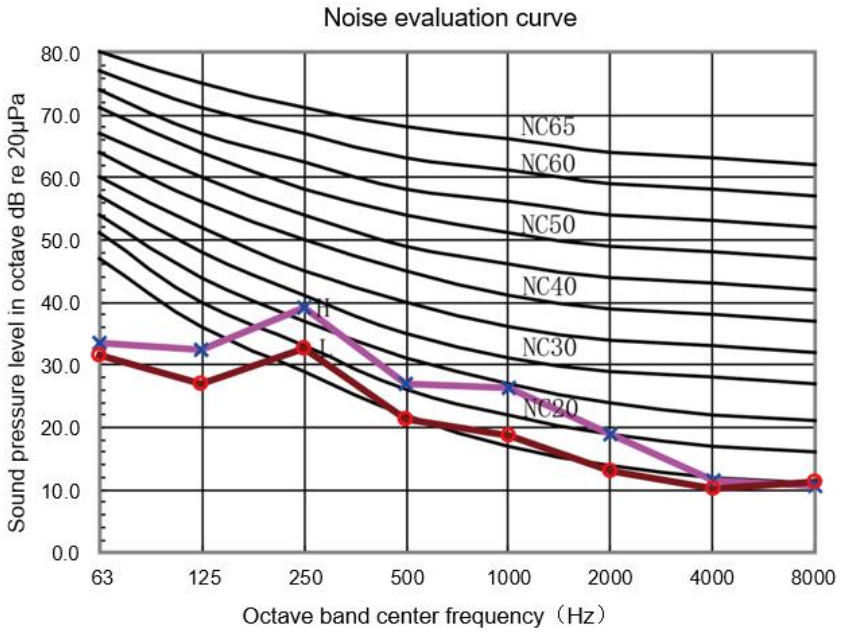

Model GMV-ND18PLS/B1-T(U)

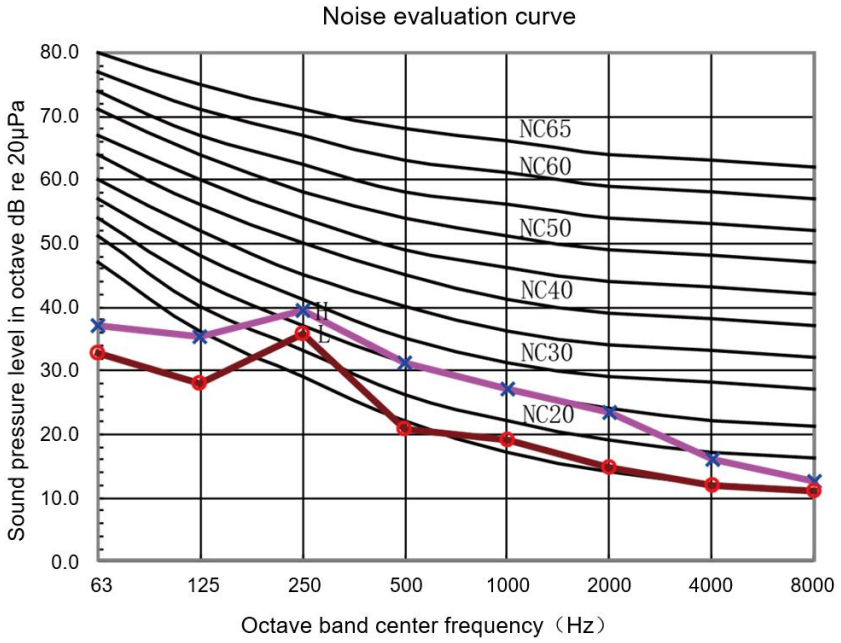

Model GMV-ND24PLS/B1-T(U)

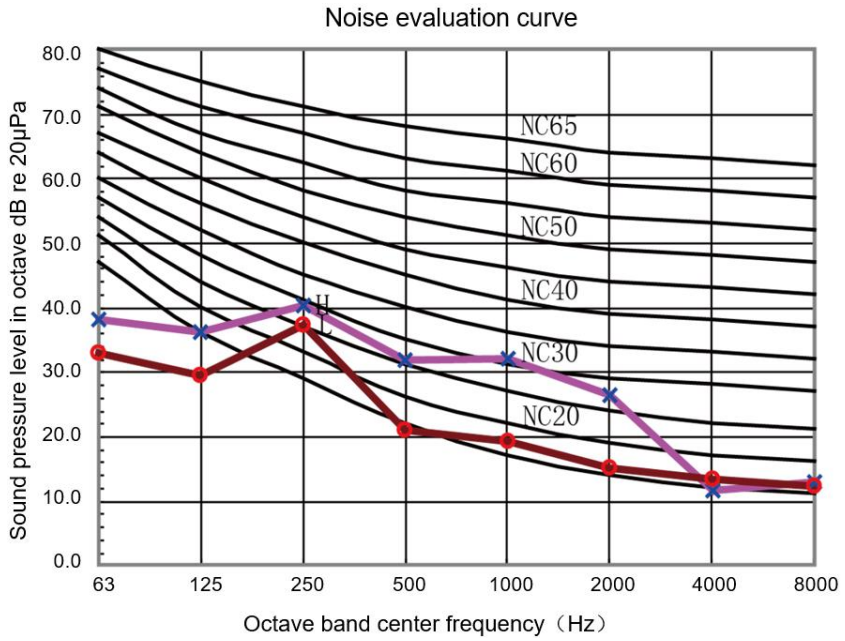

5.2 Slim Duct Type Indoor Unit

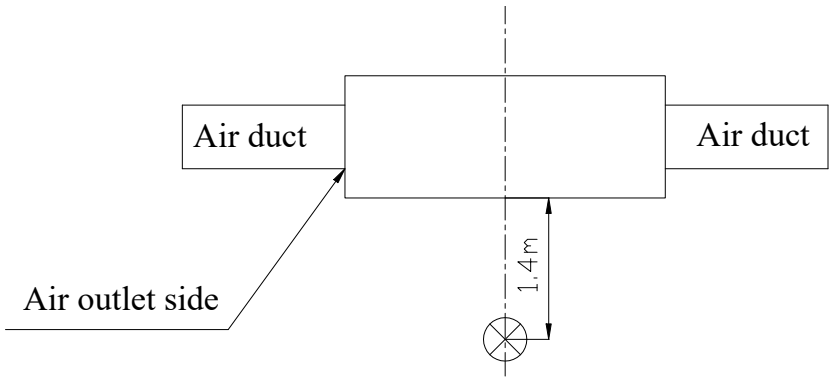

Transandient meter of sound level meter

NOTICE !

a The noise level is measured in the semi-anechoic room. It will be slightly higher due to change of the environment during actual operation.

b The noise level is measured under the standard test condition.

c The noise level is measured under the condition of rear air return. The noise level will be a little higher if the lower air return mode is adopted.

Model 07、09

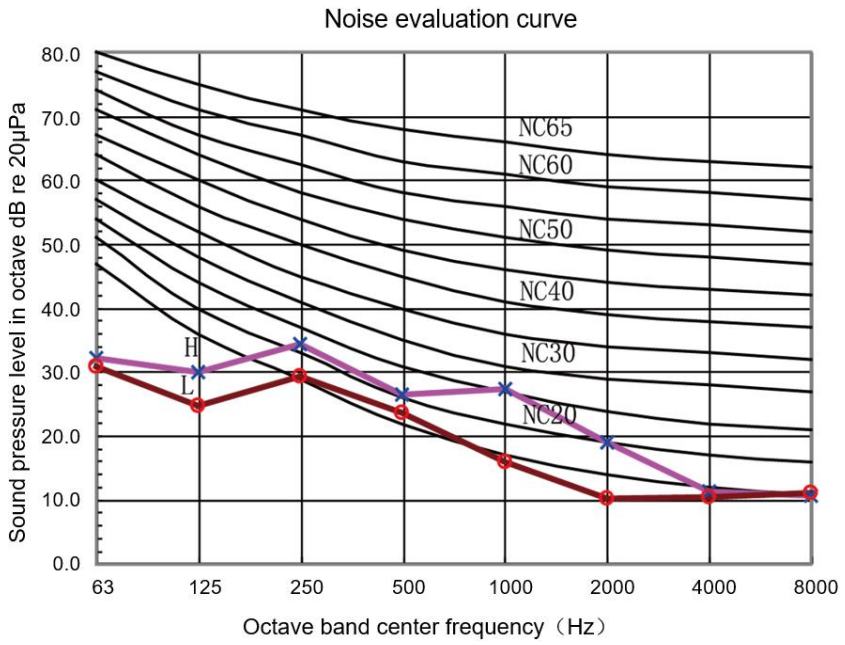

Model 12

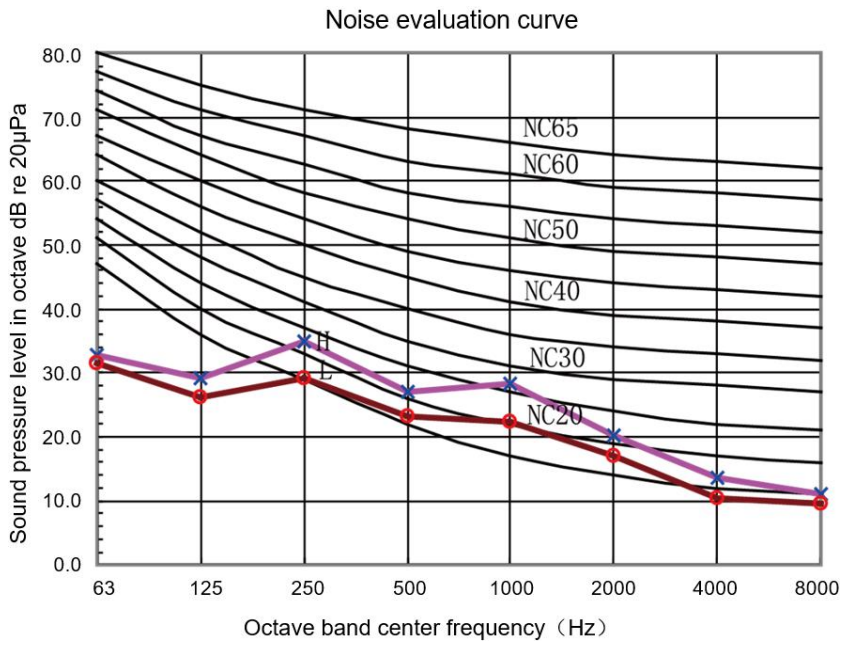

Model 14

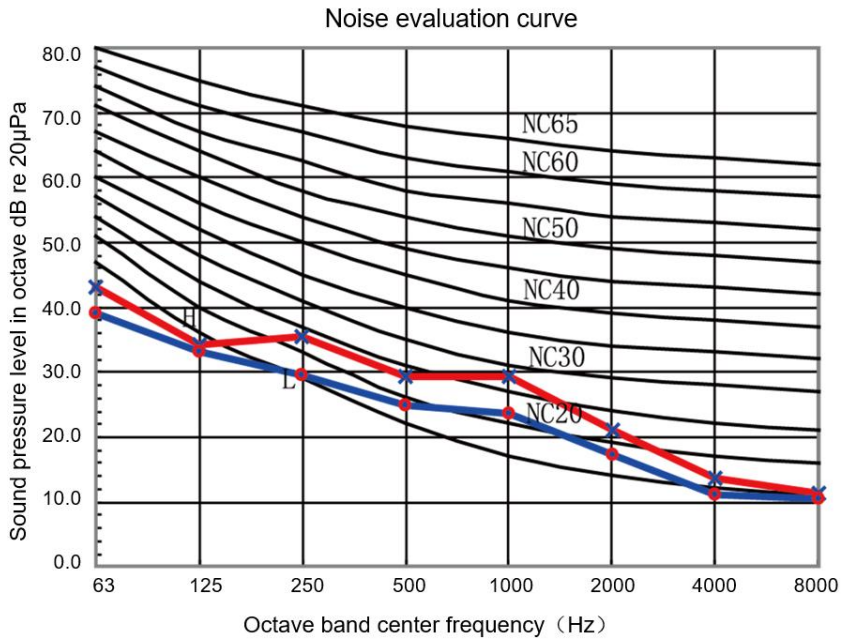

Model 18、24

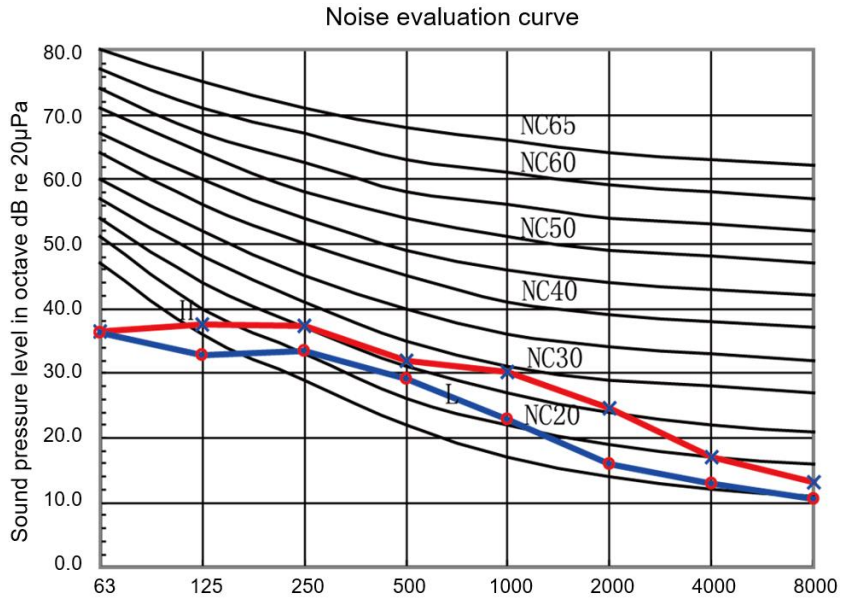

5.3 Four-way Cassette Indoor Unit GMV-ND**T/A-T(U)

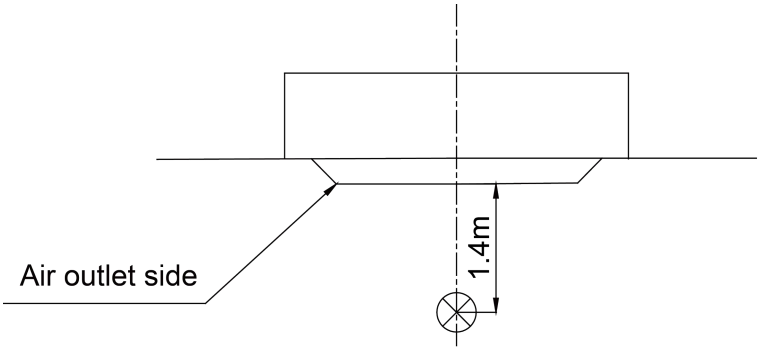

Transaudient meter of sound level meter

NOTICE !

a The noise level is measured in the semi-anechoic room. It will be slightly higher due to change of the environment during actual operation.

b The noise level is measured under the standard test condition.

Model 07

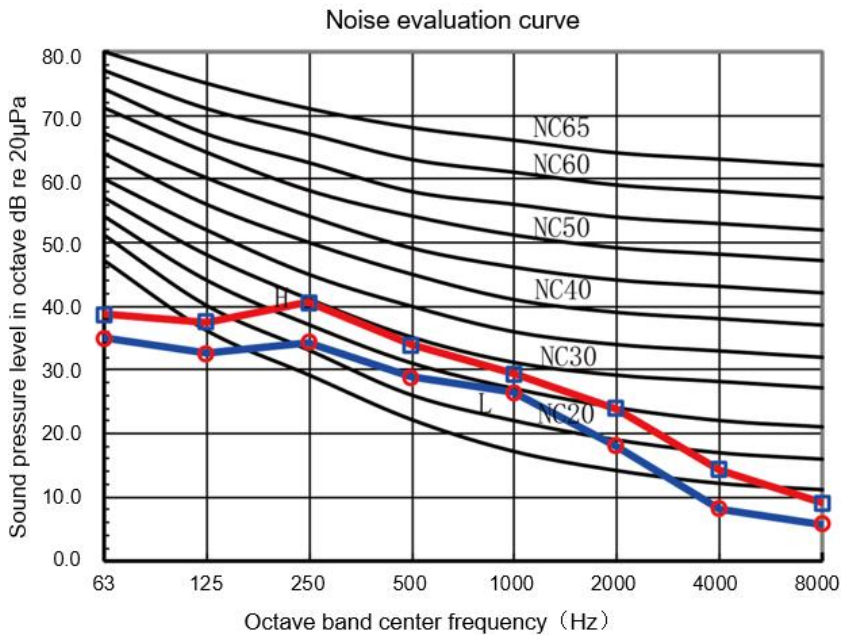

Model 09-18

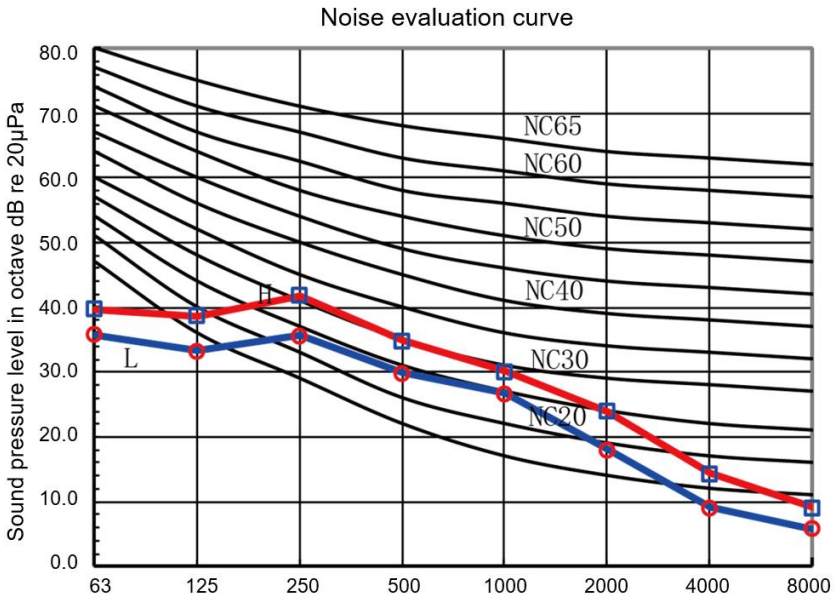

Model 24

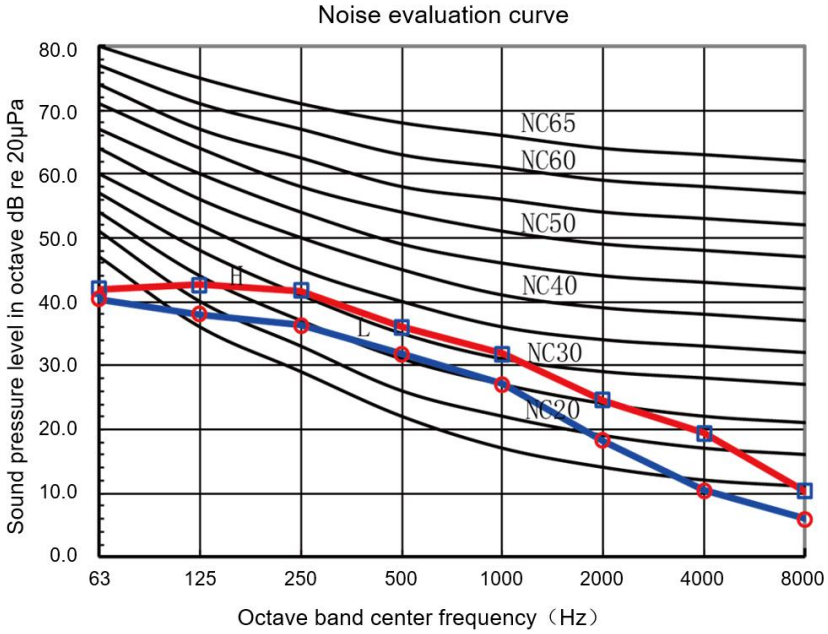

Model 30

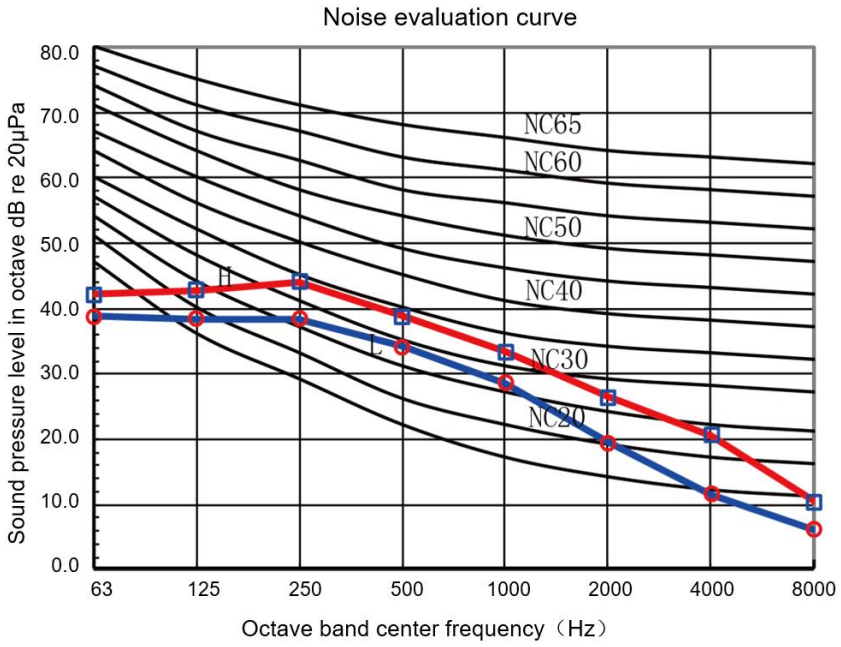

Model 36

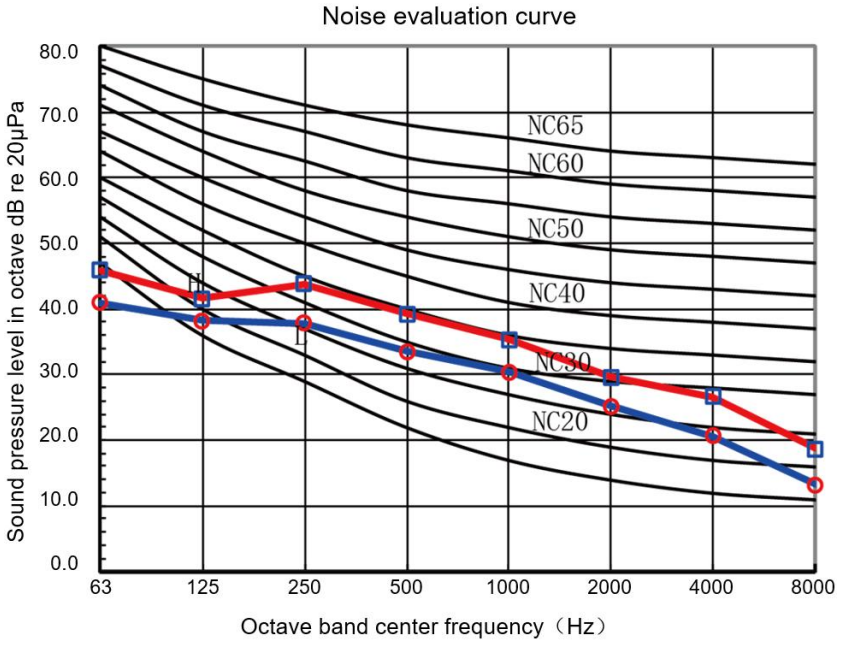

Model 42、48

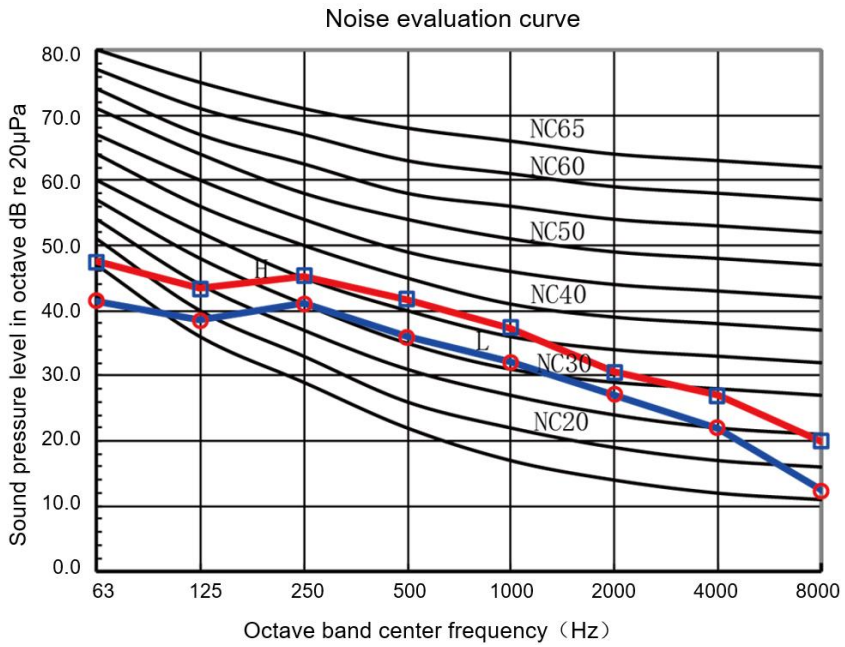

5.4 High Static Pressure Duct Type Indoor Unit GMV-ND**PHS/A-T(U)、GMV-ND**PH/A-T(U)

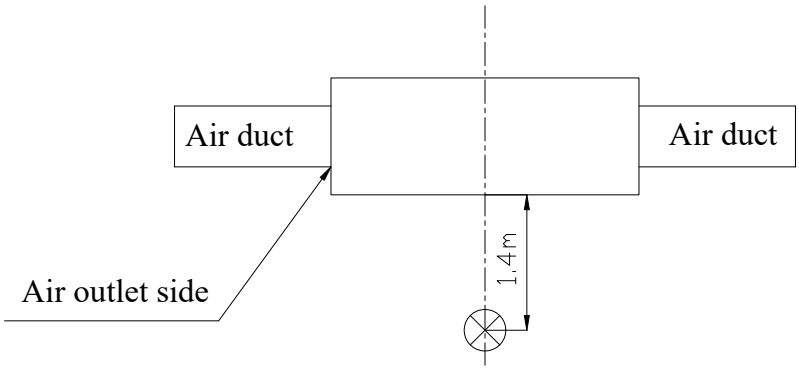

Transandient meter of sound level meter

NOTICE！

a The noise level is measured in the semi-anechoic room. It will be slightly higher due to change of the environment during actual operation.

b The noise level is measured under the standard test condition.

c The noise level is measured under the condition of rear air return.

Model 18

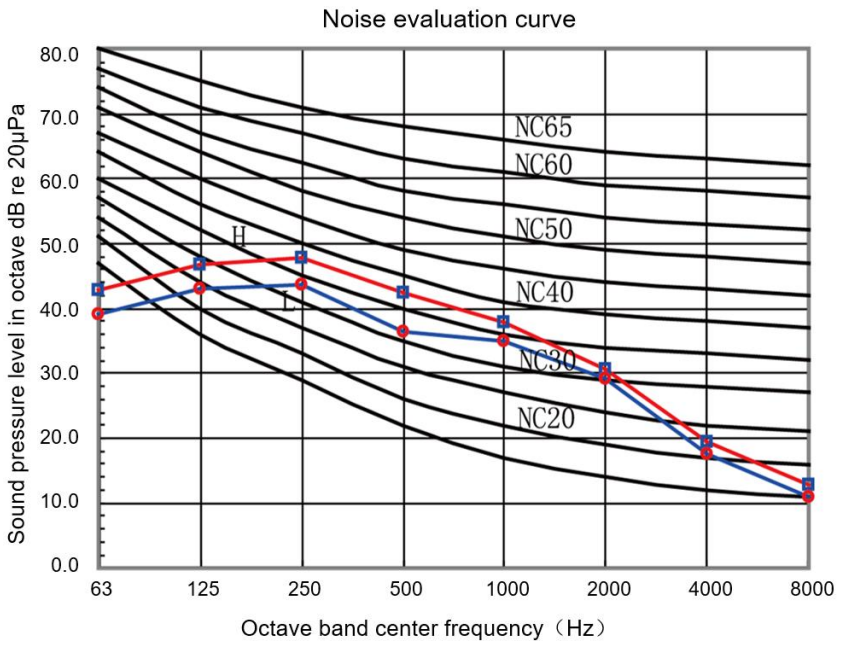

Model 24

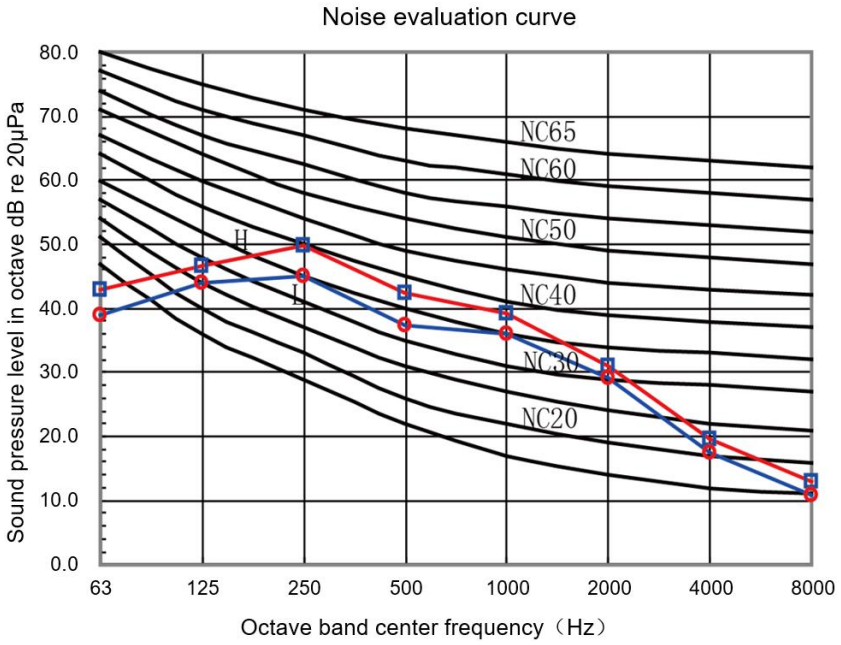

Model 30、36

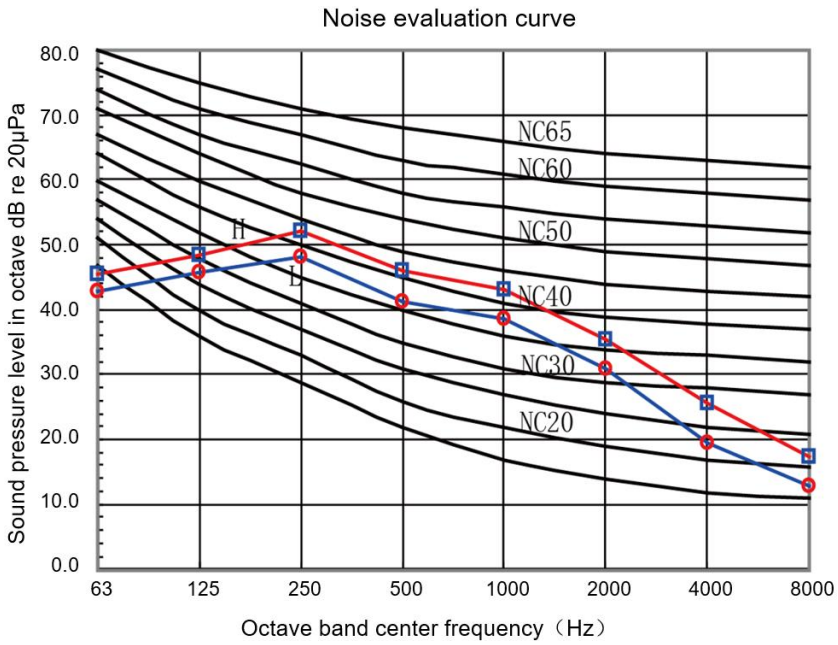

Model 42、48

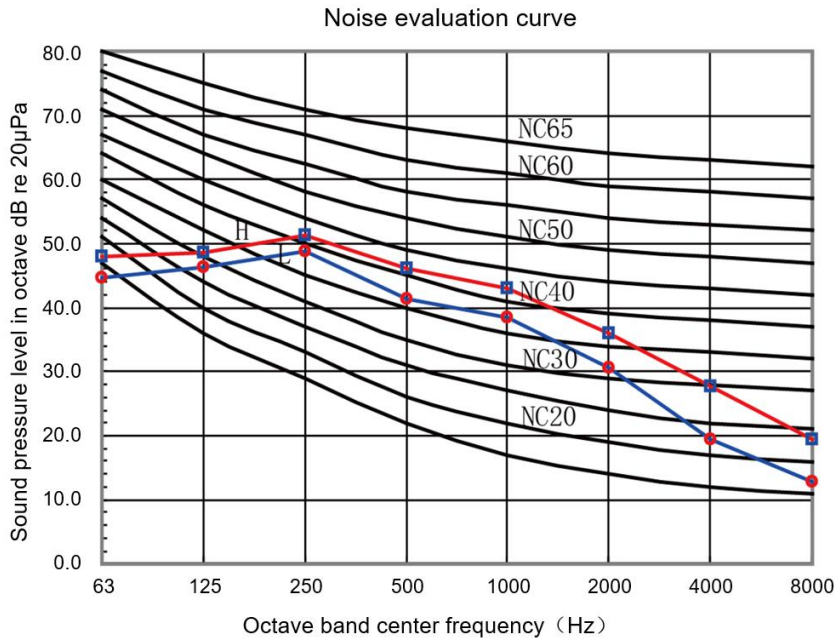

Model GMV-ND72PH/A-T(U)

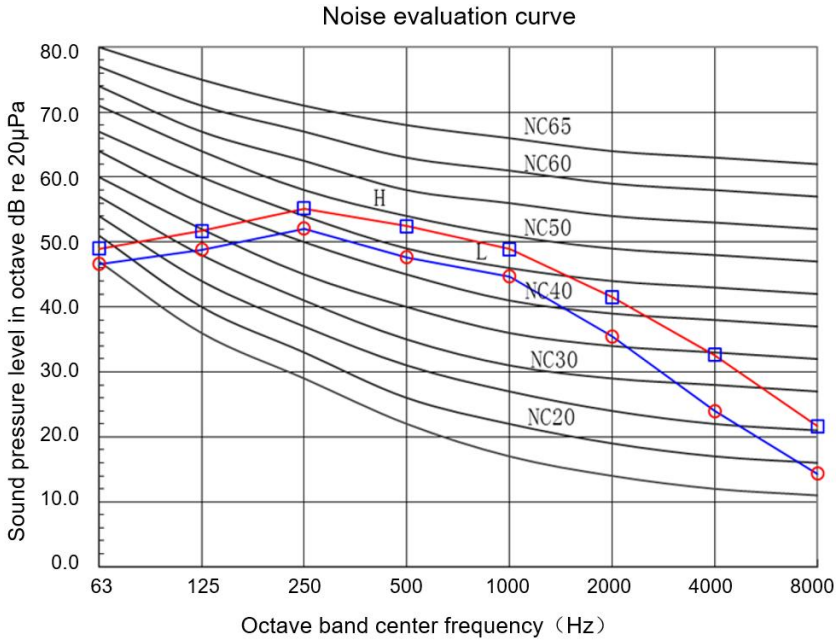

Model GMV-ND96PH/A-T(U)

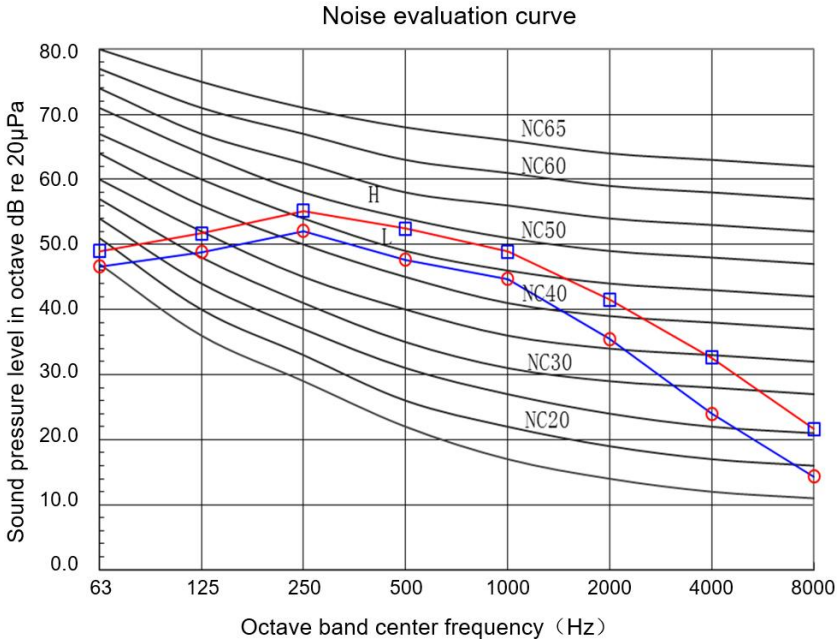

5.5 Floor Ceiling Type Indoor Unit GMV-ND**ZD/A-T(U)

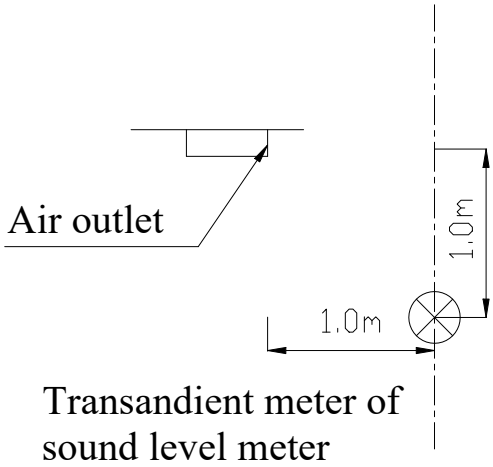

NOTICE!

a The noise level is measured in the semi-anechoic room. It will be slightly higher due to change of the environment during actual operation.

b The noise level is measured under the standard test condition.

c The noise level is measured under the condition of ceiling installation.

Model 09、12

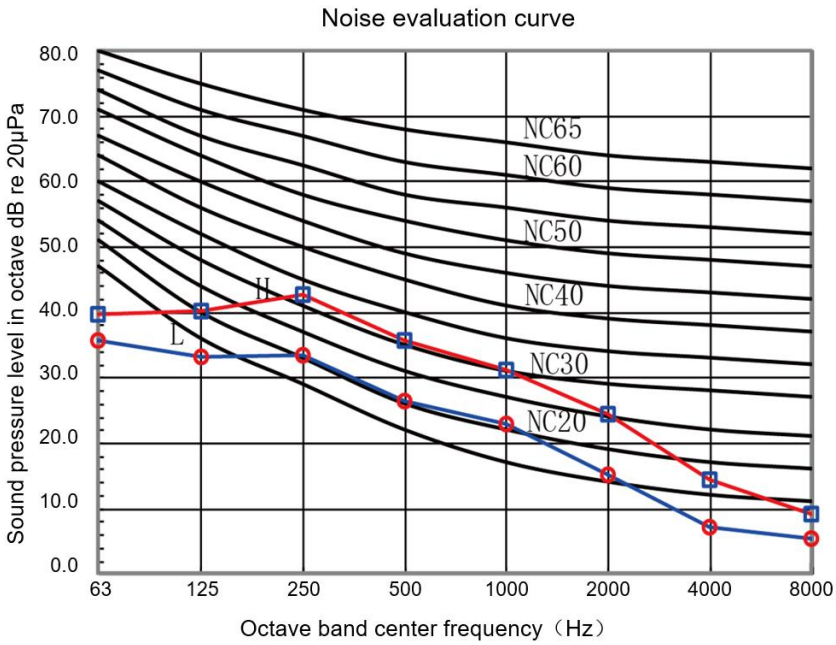

Model 18

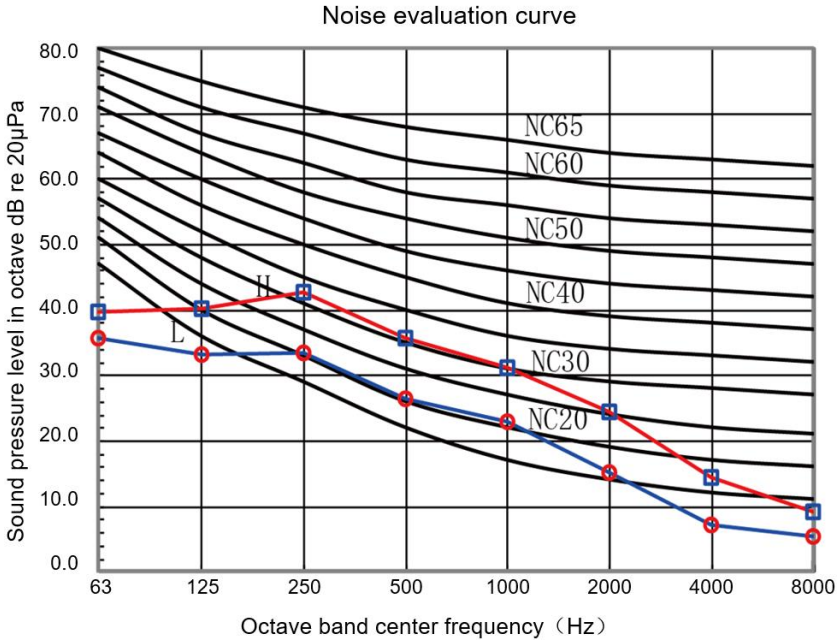

Model 24

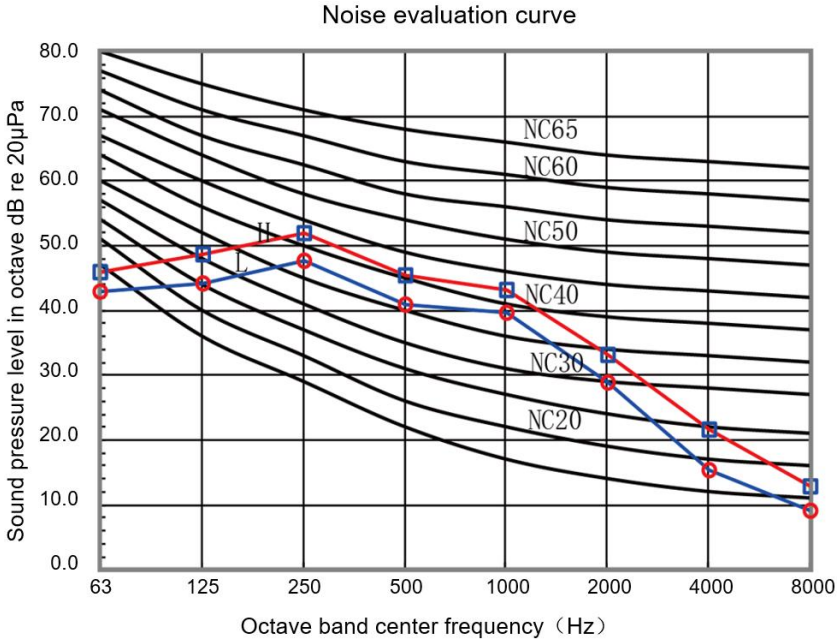

Model 30

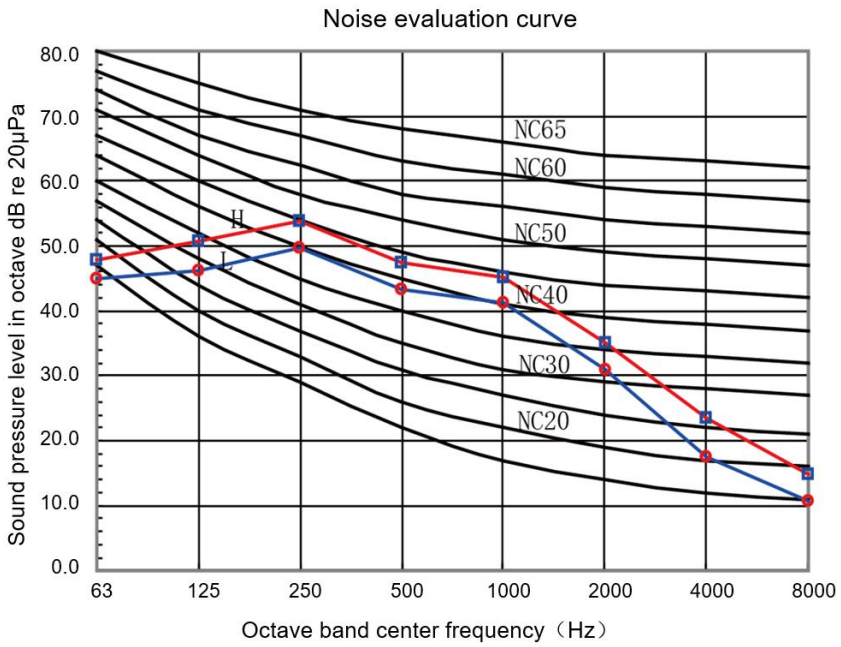

Model 36、42、48

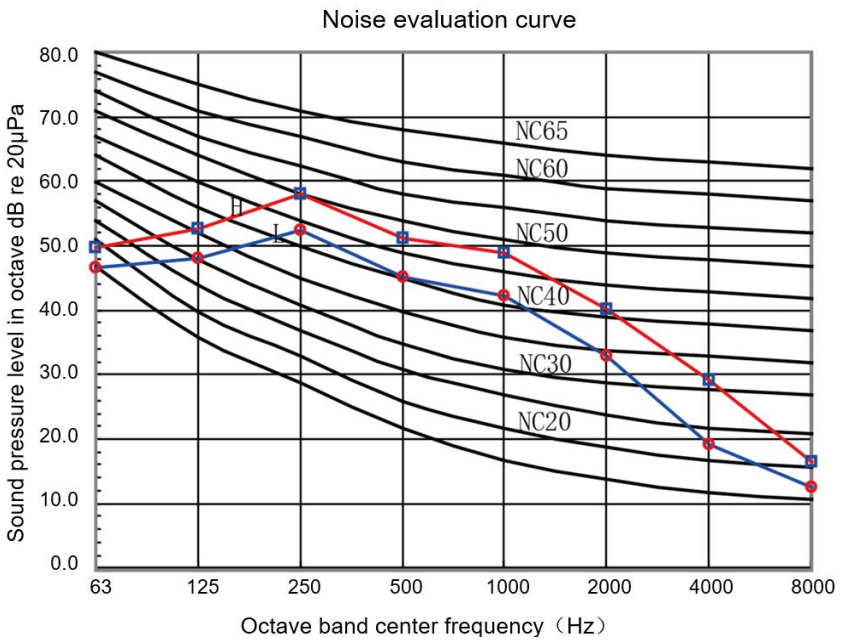

5.6 Wall Mounted Type Indoor Unit

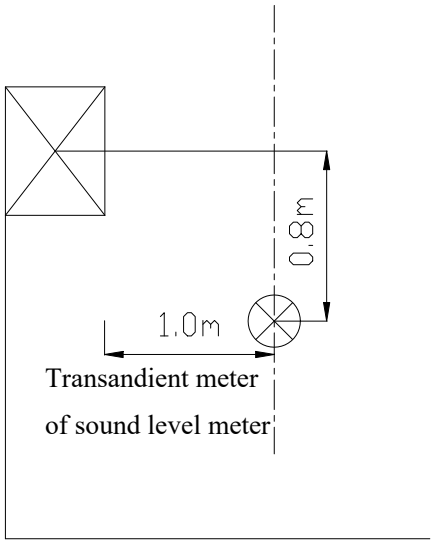

NOTICE！

a The noise level is measured in the semi-anechoic room. It will be slightly higher due to change of the environment during actual operation.

b The noise level is measured under the standard test condition.

Model 07、09

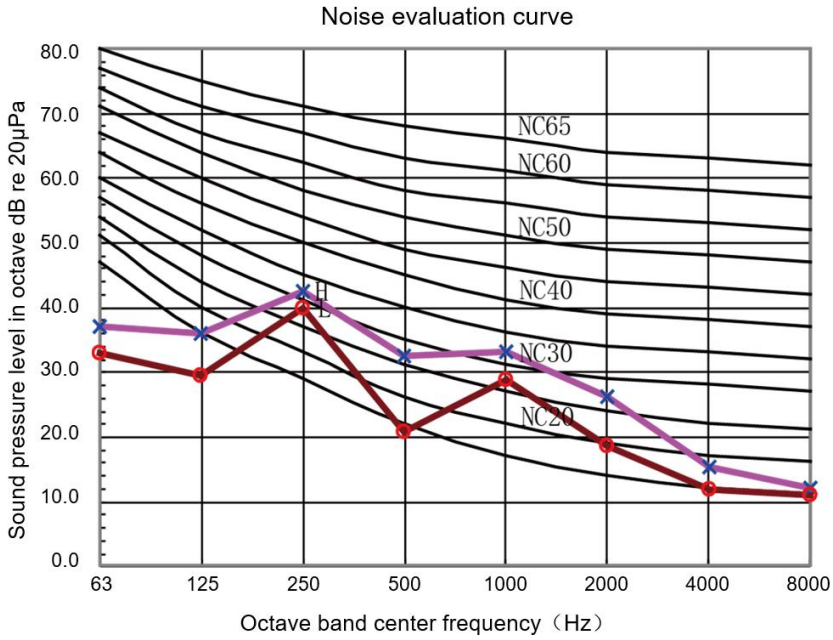

Model 12、18

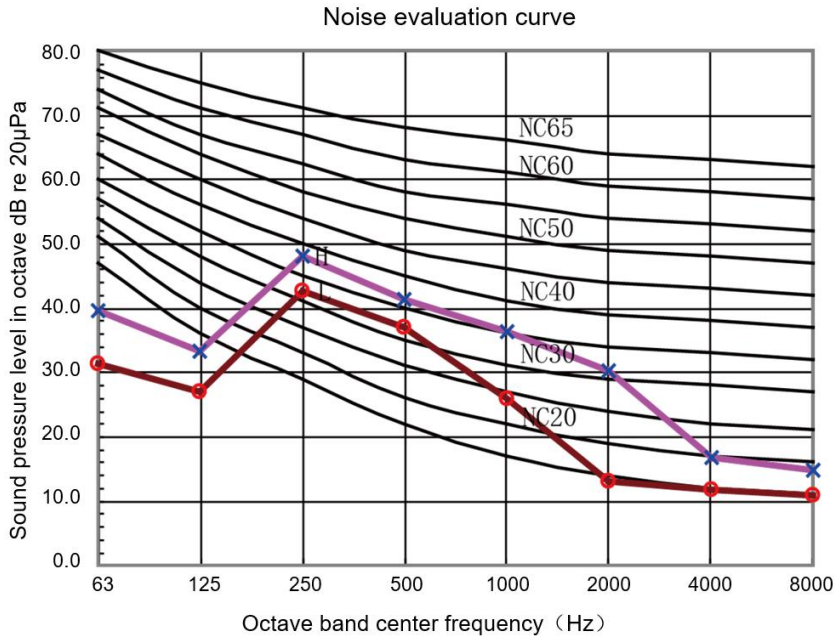

Model 24

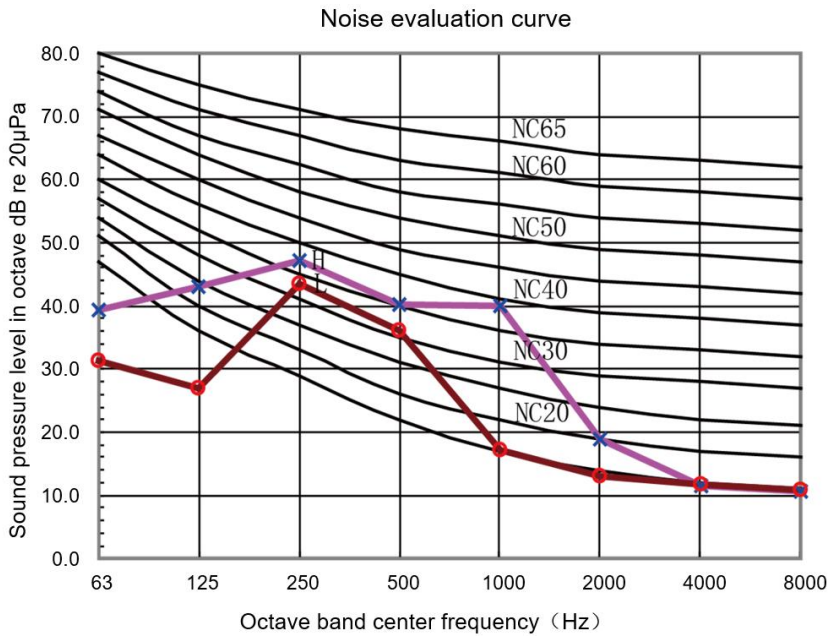

5.7 Fresh Air Processing Unit GMV-NDX**P/A-T(U)

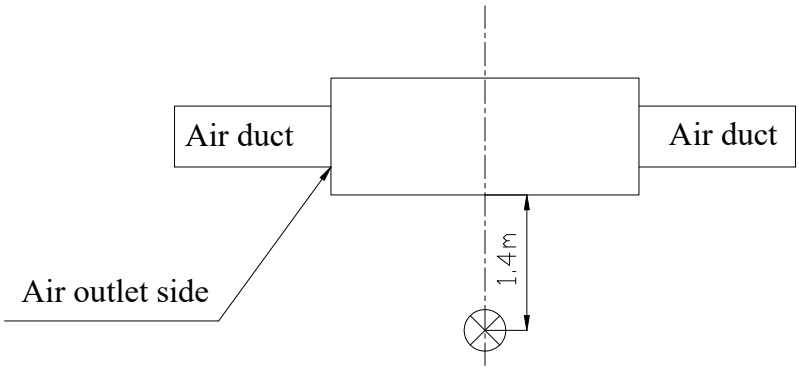

Transandient meter of sound level meter

NOTICE！

a The noise level is measured in the semi-anechoic room. It will be slightly higher due to change of the environment during actual operation.

b The noise level is measured under the standard test condition.

c The noise level is measured under the condition of rear air return.

Model GMV-NDX42P/A-T(U)、GMV-NDX48P/A-T(U)

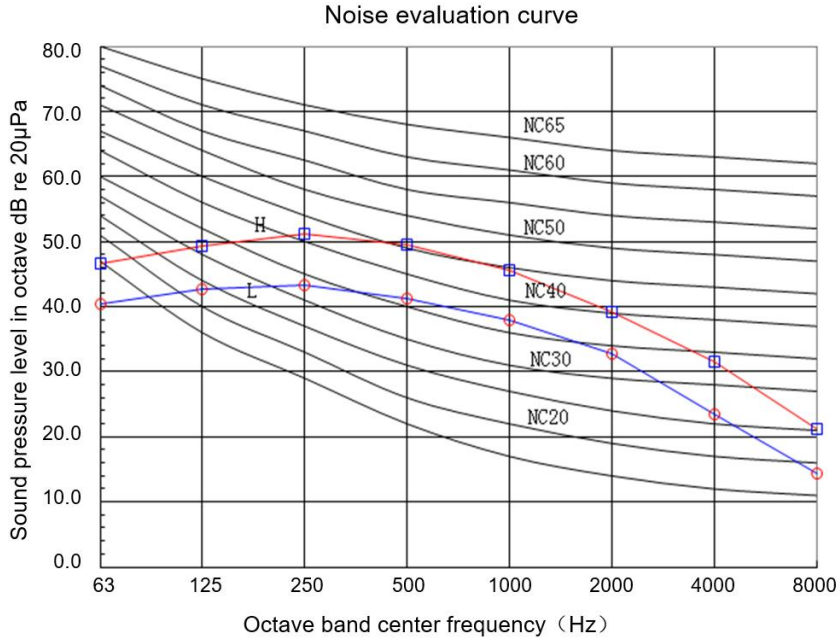

Model GMV-NDX54P/A-T(U)、GMV-NDX72P/A-T(U)

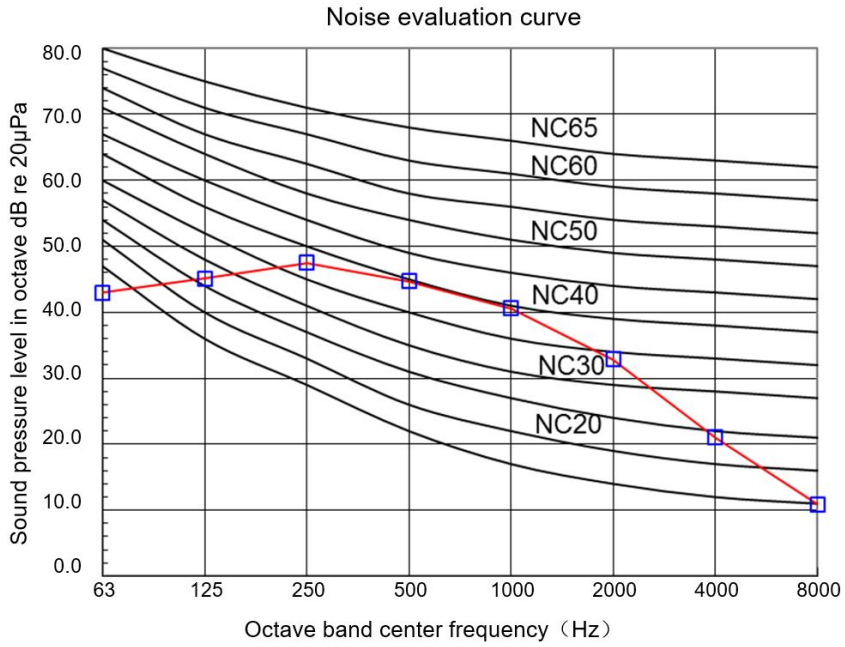

Model GMV-NDX96P/A-T(U)

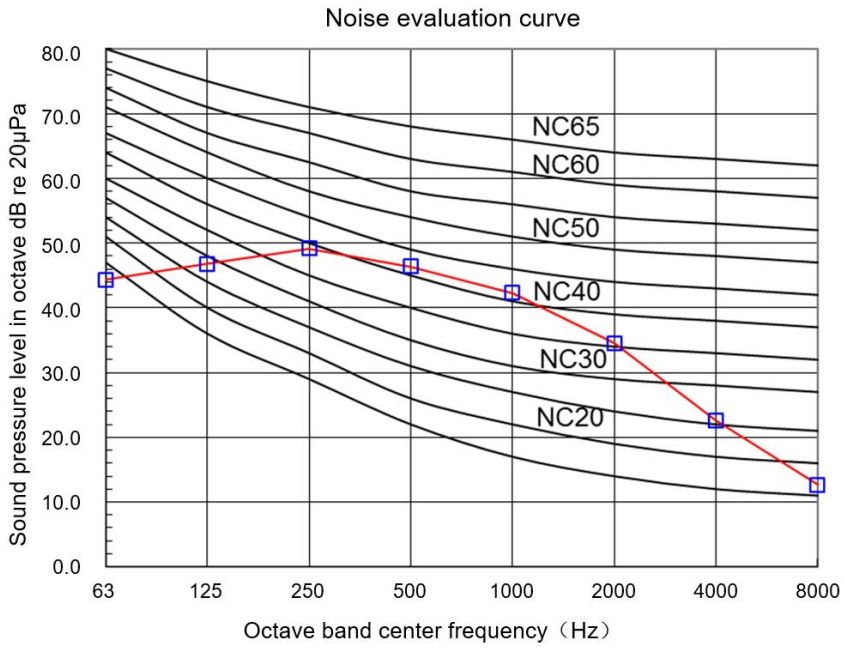

5.8 Console Type

Floor type

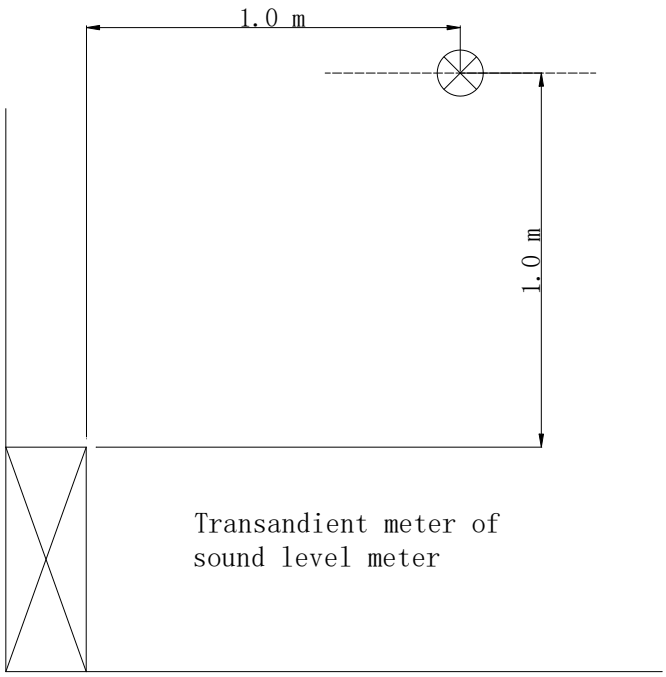

Wall Mounted type

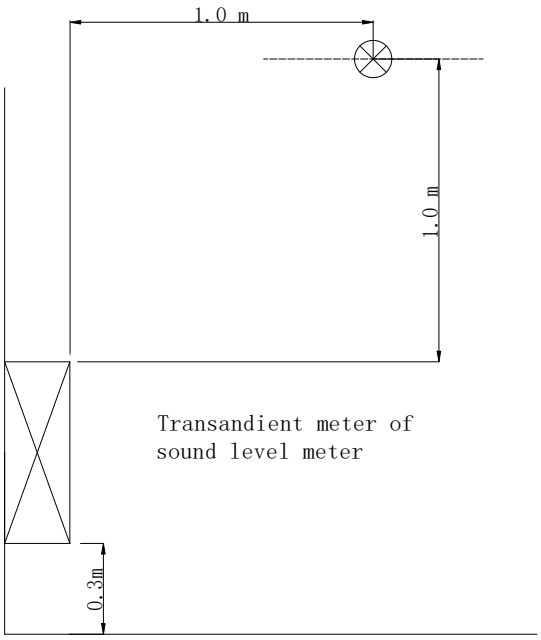

Model GMV-ND07C/A-T(U)、GMV-ND09C/A-T(U)

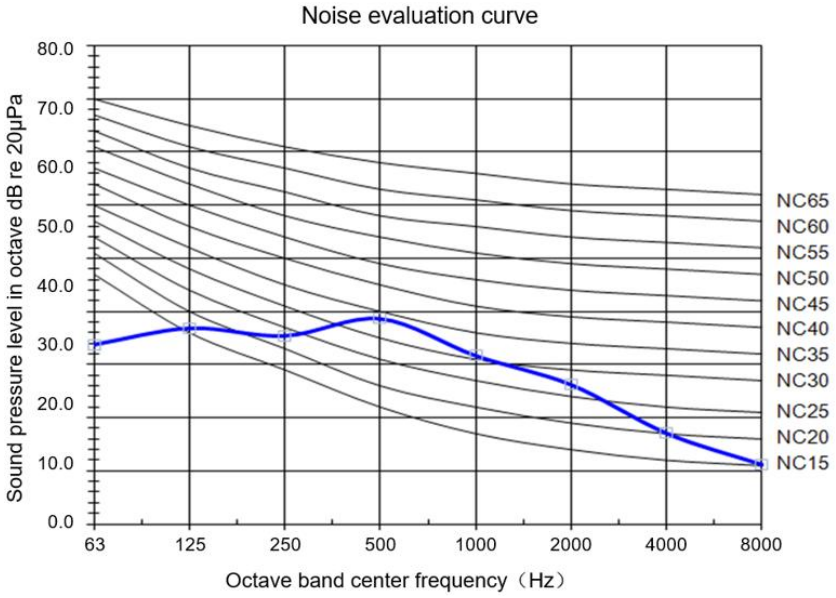

Model GMV-ND12C/A-T(U)

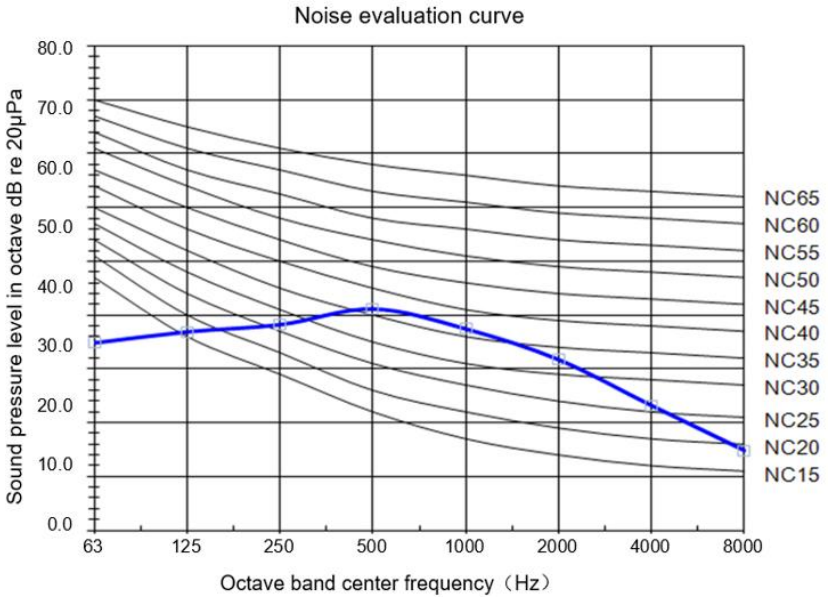

Model GMV-ND18C/A-T(U)

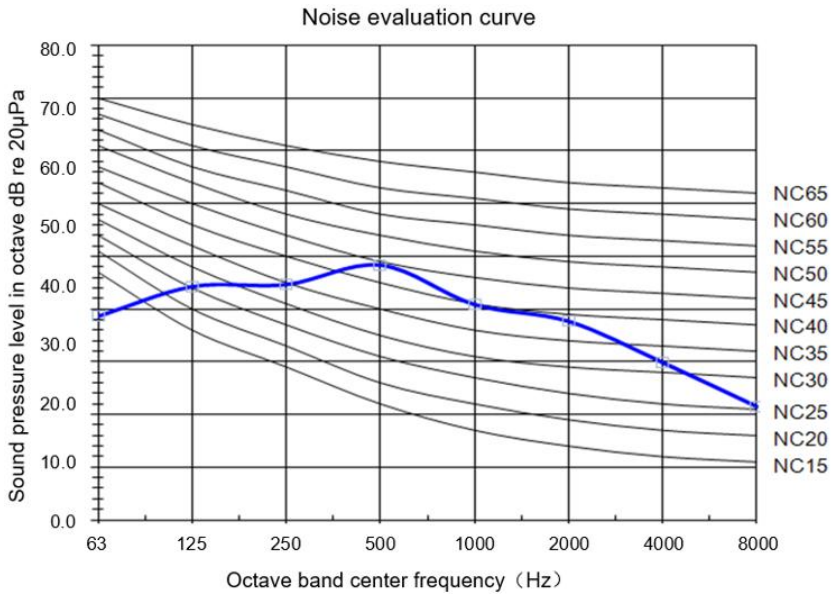

5.9 Two-way Cassette Type

5.9.1 GMV-ND**TS/A-T(U)

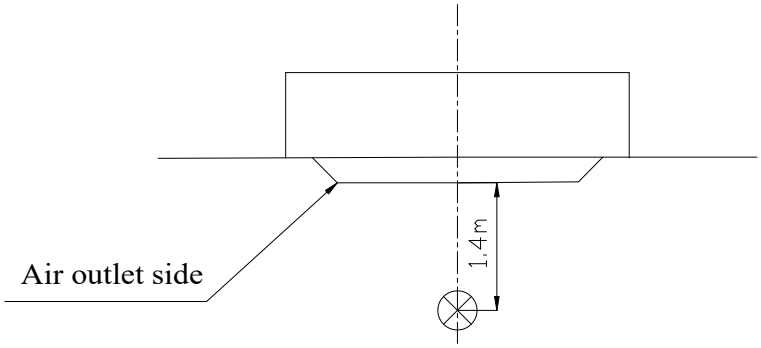

Transandient meter of sound level meter

NOTICE！

a The noise level is measured in the semi-anechoic room. It will be slightly higher due to change of the environment during actual operation.

b The noise level is measured under the standard test condition.

Model 09-18

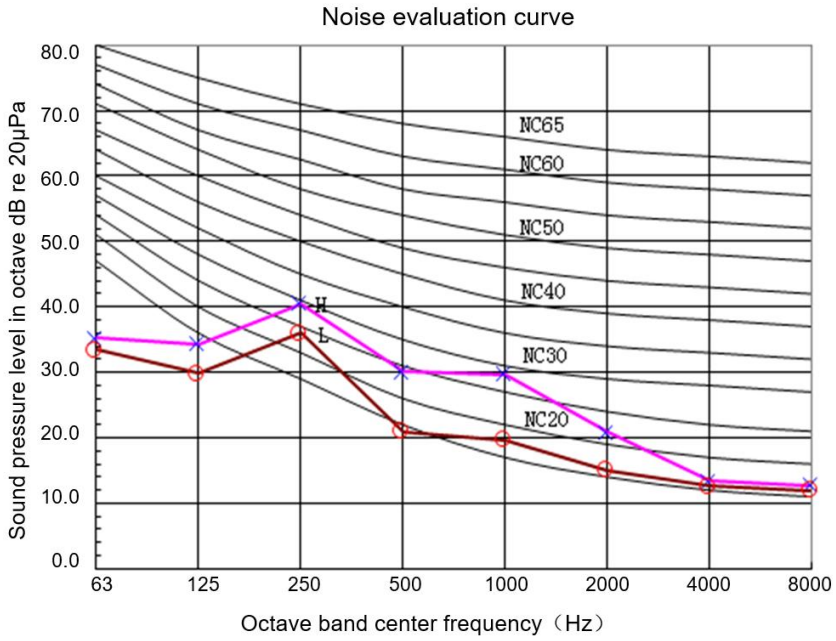

Model 24

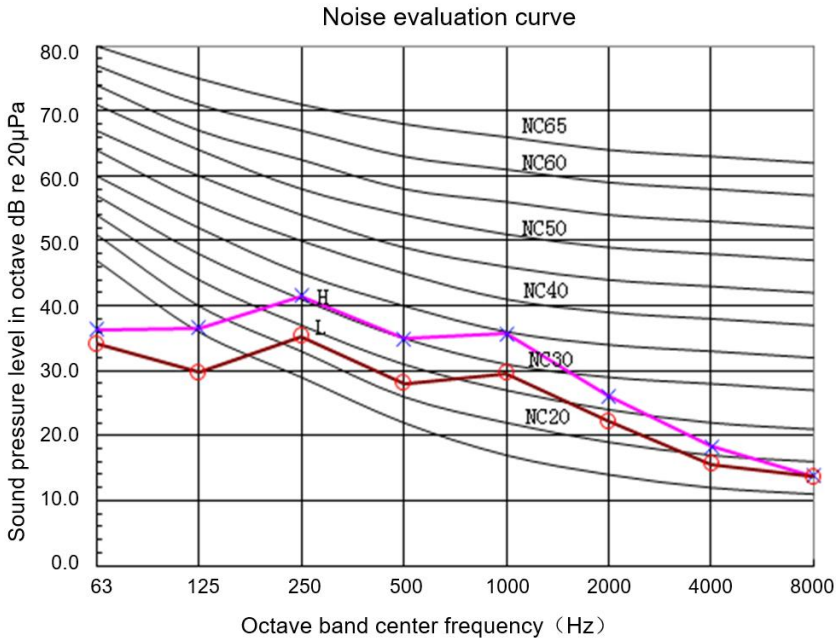

5.9.2 GMV-ND**TS/B-T(U)

Model GMV-ND09TS/B-T(U)、GMV-ND12T/B-T(U)

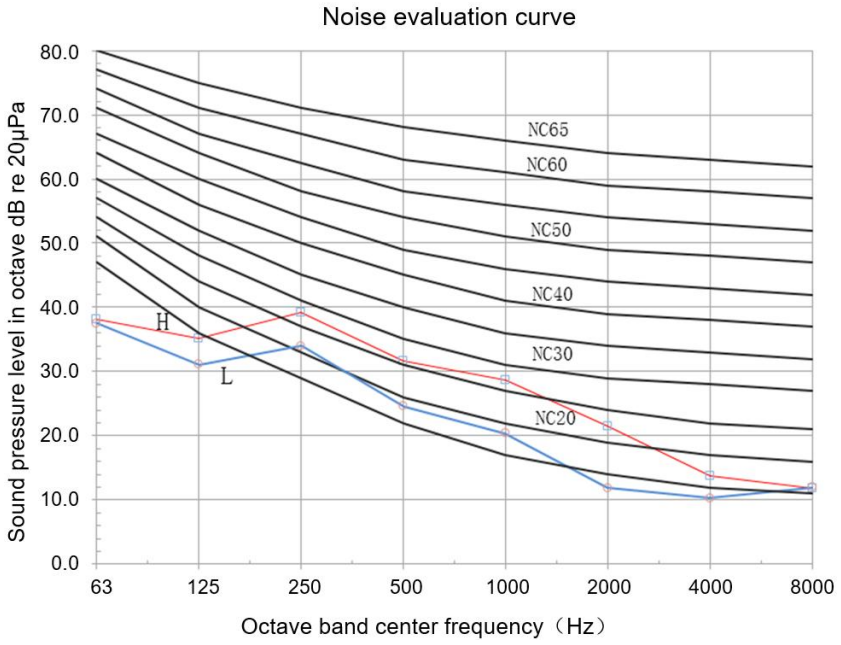

Model GMV-ND15TS/B-T(U)

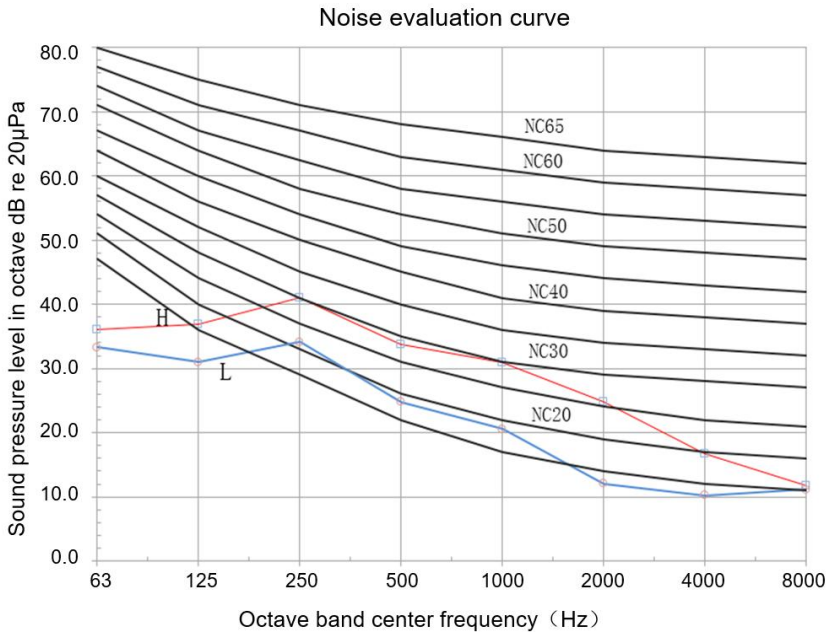

Model GMV-ND18TS/B-T(U)

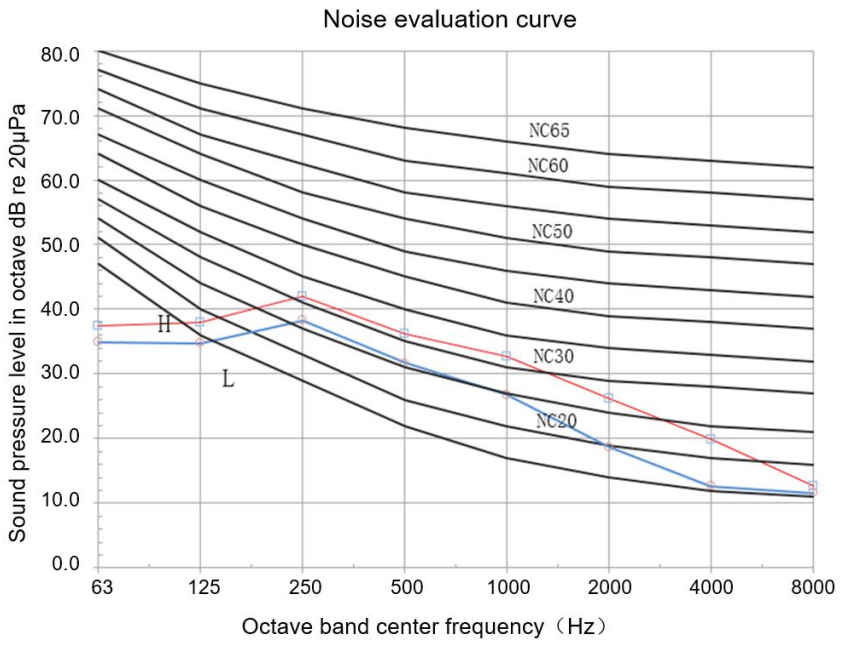

Model GMV-ND24TS/B-T(U)

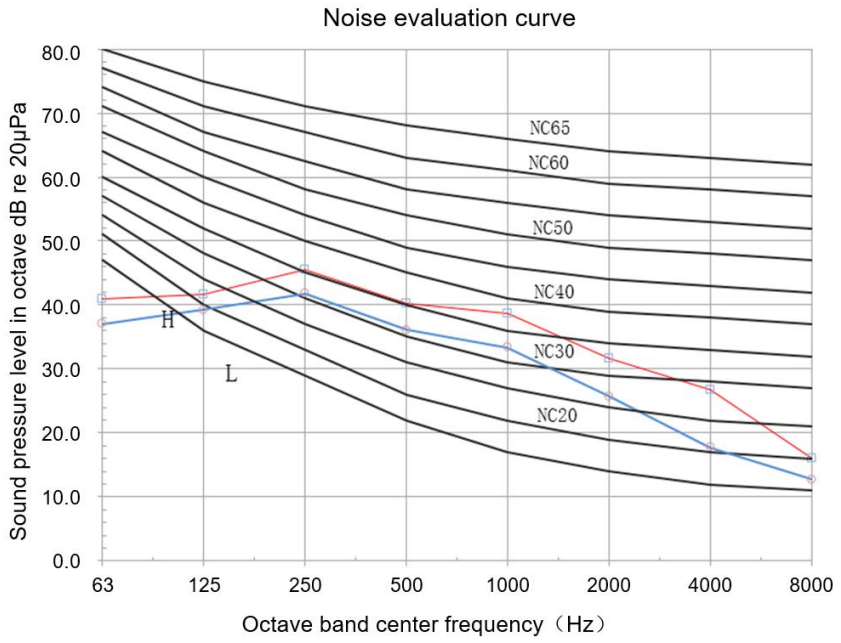

5.10 Compact Four-way Cassette Type GMV-ND**T/B-T(U)

Model GMV-ND07T/B-T(U)- GMV-ND12T/B-T(U)

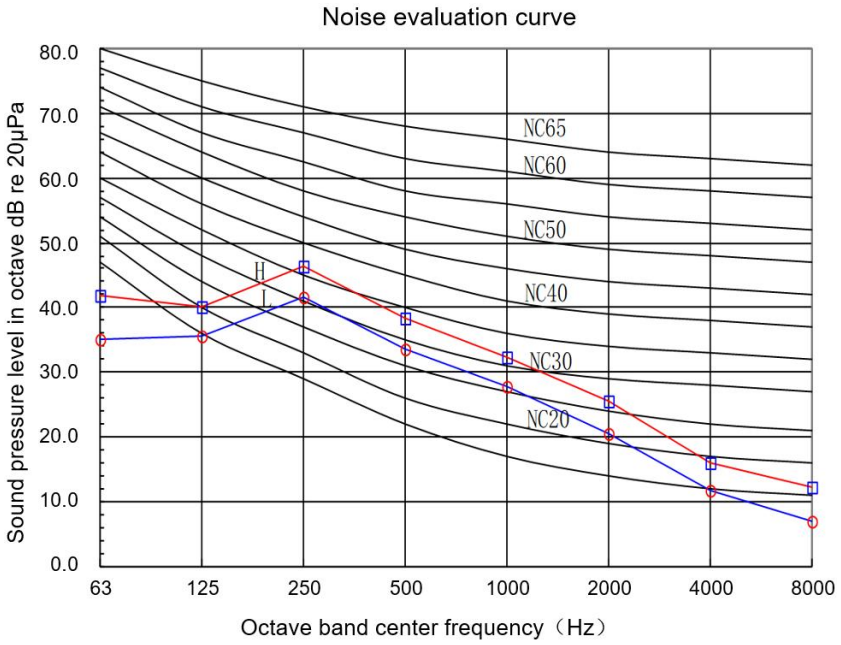

Model GMV-ND15T/B-T(U)- GMV-ND18T/B-T(U)

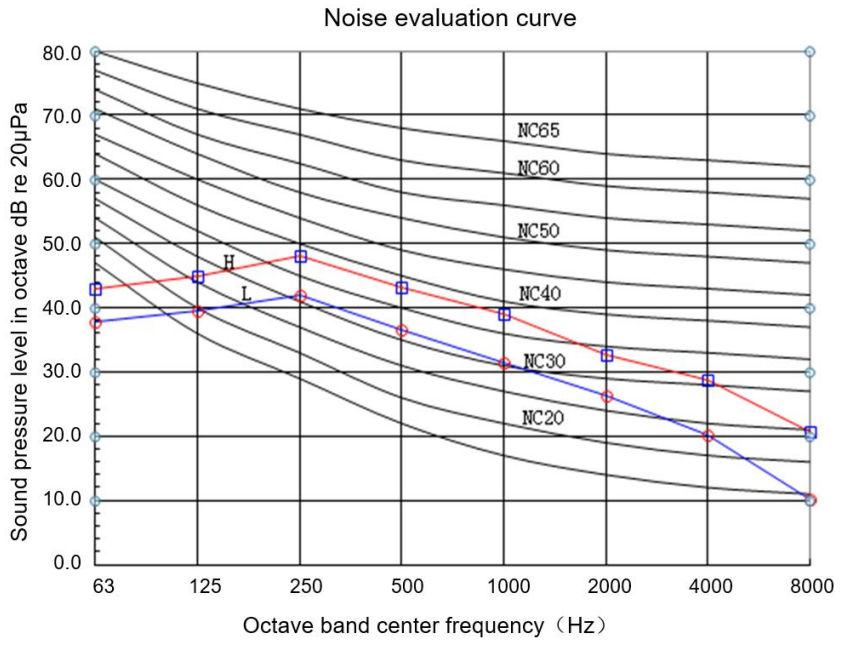

5.11 Super High Static Pressure Duct Type Indoor Unit

GMV-ND**PHS/B-T(U)

Model GMV-ND07PHS/B-T(U)、GMV-ND09PHS/B-T(U)

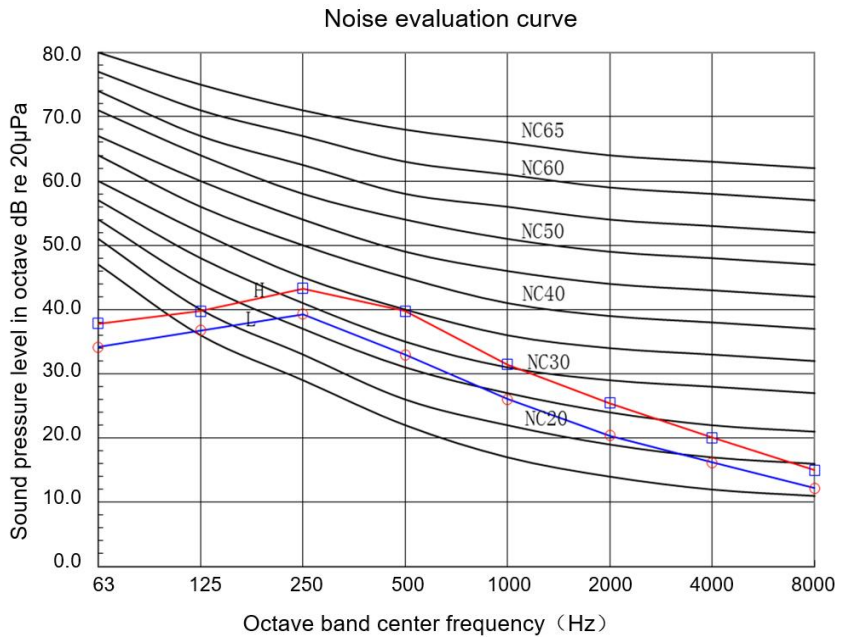

Model GMV-ND12PHS/B-T(U) 、 GMV-ND15PHS/B-T(U) 、 GMV-ND18PHS/B-T(U) 、 GMV-ND22PHS/B-T(U)、GMV-ND24PHS/B-T(U)

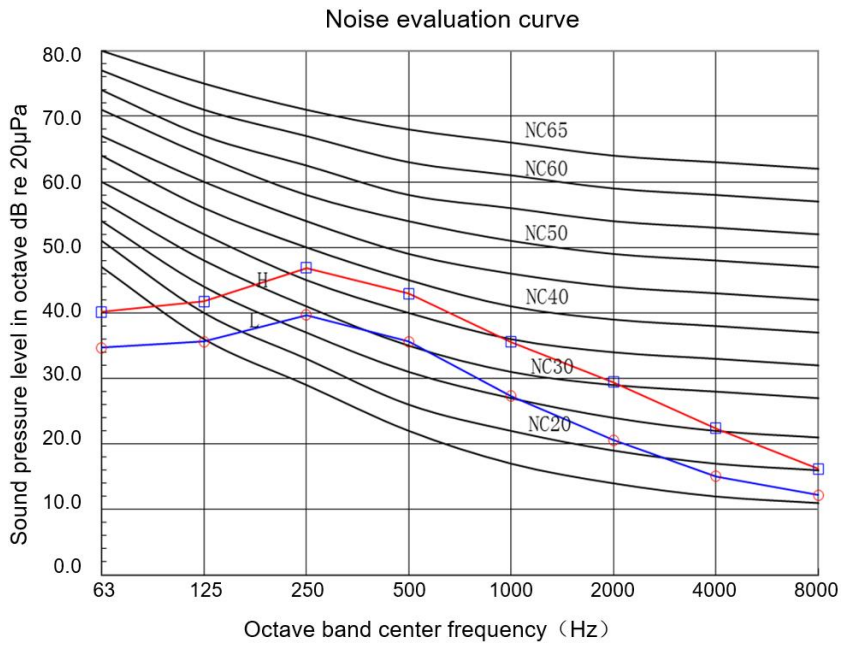

Model GMV-ND30PHS/B-T(U)、GMV-ND36PHS/B-T(U) 、GMV-ND42PHS/B-T(U)

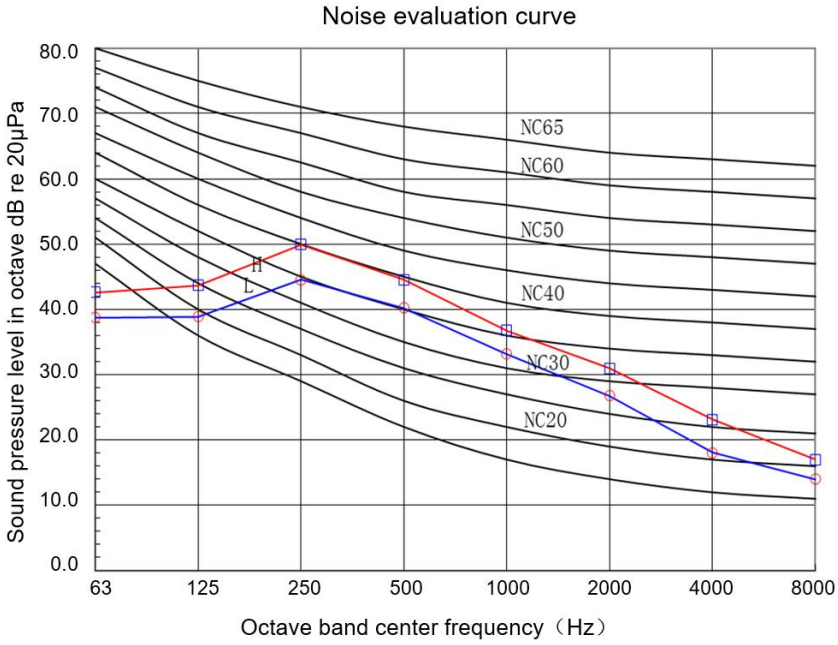

Model GMV-ND48PHS/B-T(U)、GMV-ND54PHS/B-T(U)

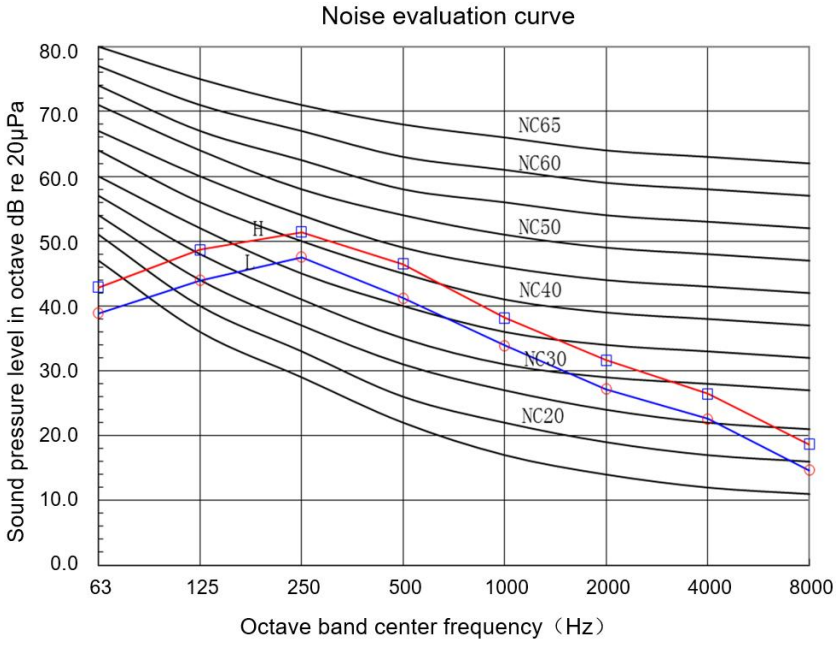

Model GMV-ND72PH/B-T(U)

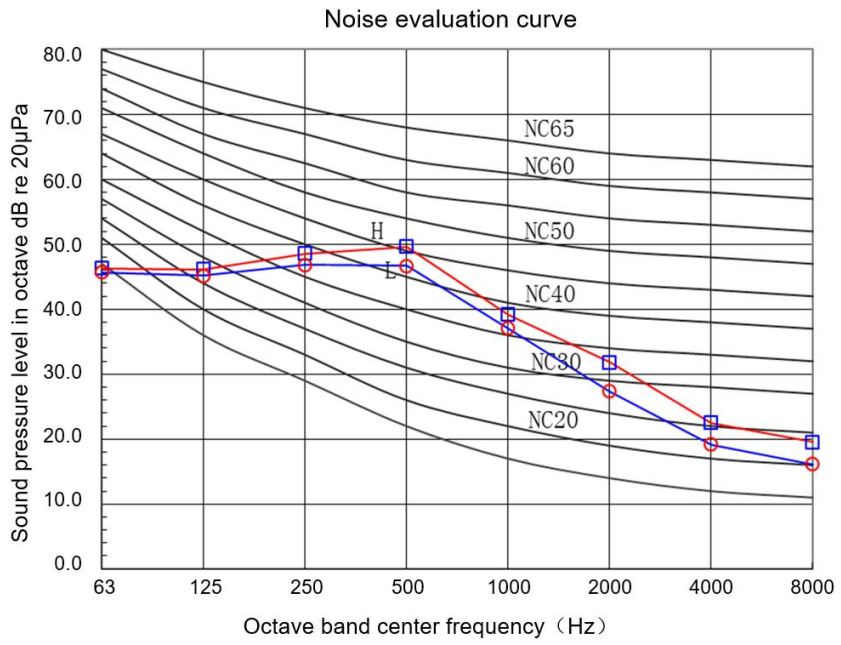

Model GMV-ND96PH/B-T(U)

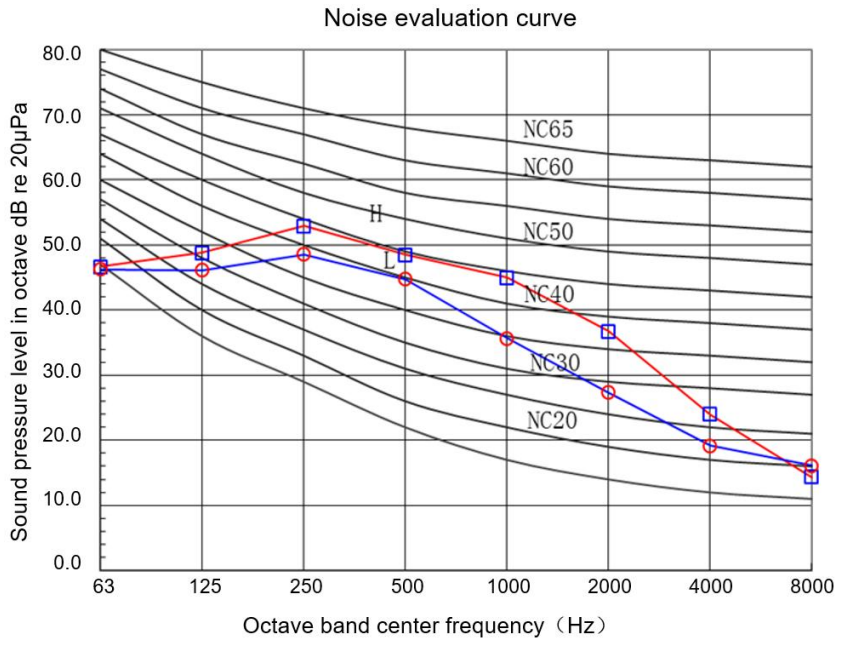

GMV-ND**PHS/D-T(U)

GMV-ND07-09PHS/D-T(U)

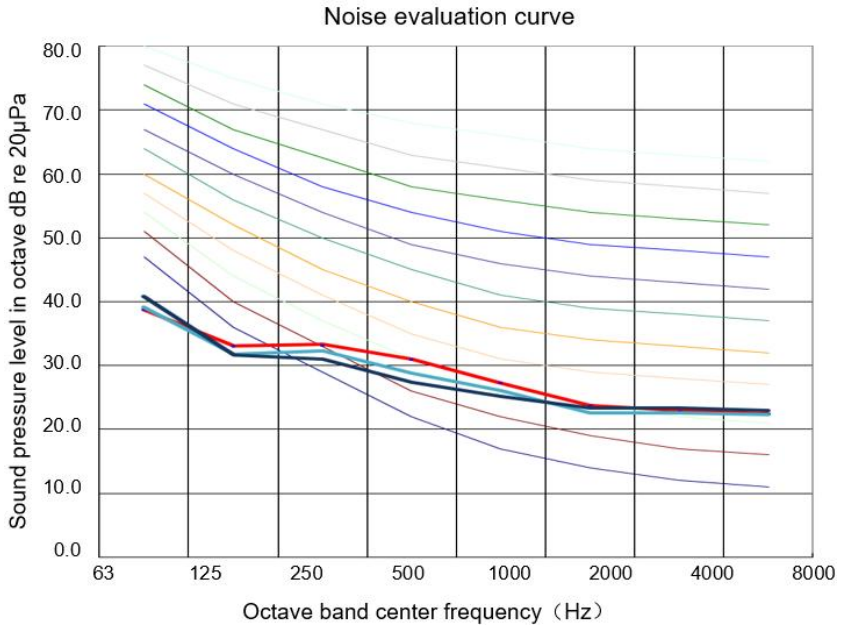

GMV-ND12~18PHS/D-T(U)

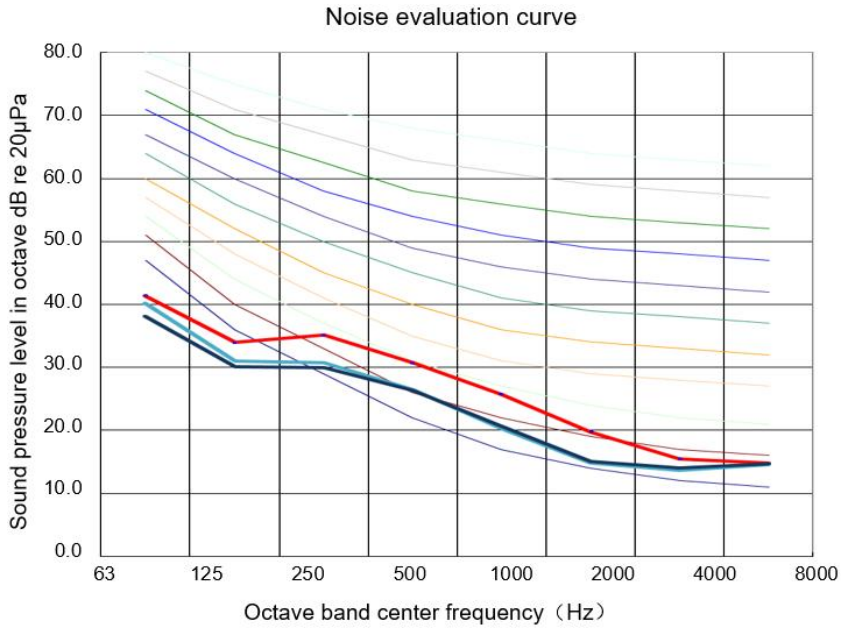

GMV-ND22~24PHS/D-T(U)

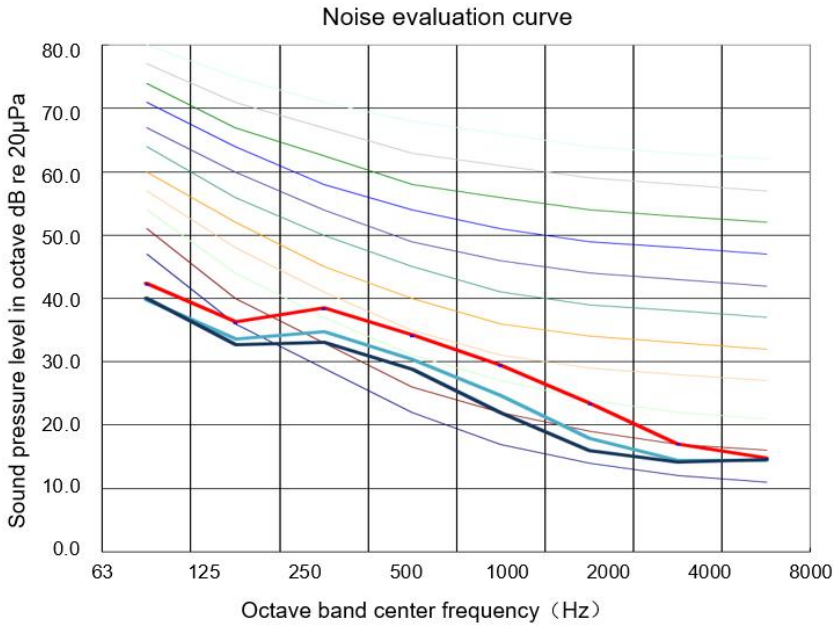

GMV-ND30~42PHS/D-T(U)

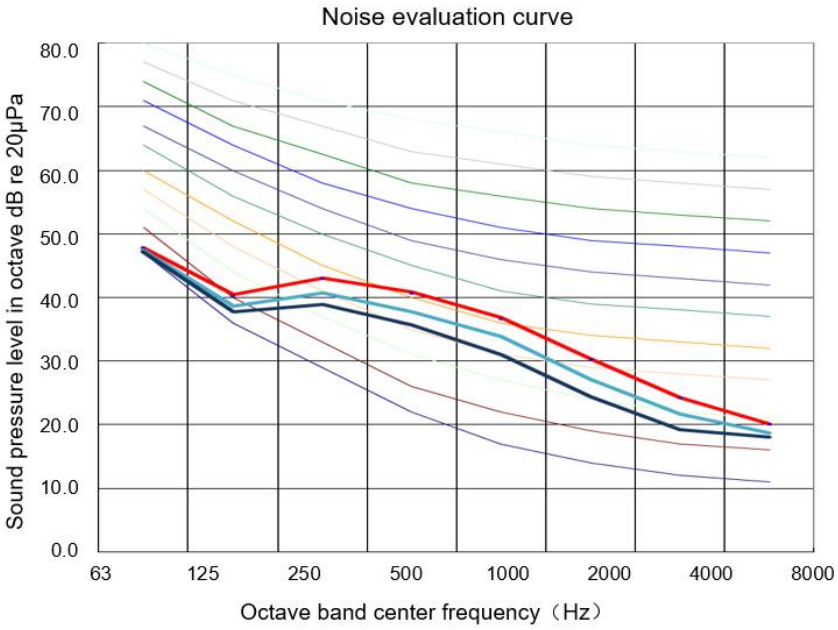

GMV-ND48~54PHS/D-T(U)

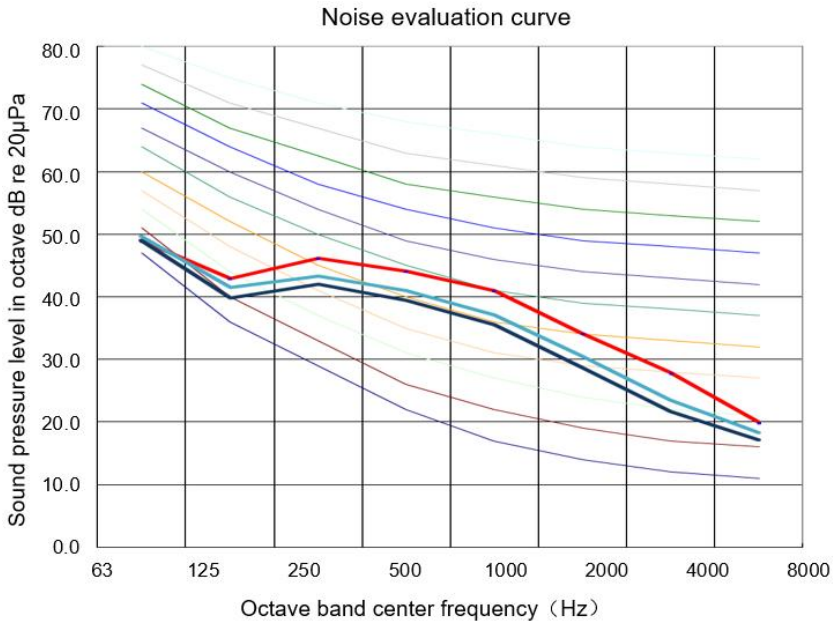

5.12 Air Handler Type Indoor Unit

GMV-ND**A/A-T(U)

Model GMV-ND09A/A-T(U)

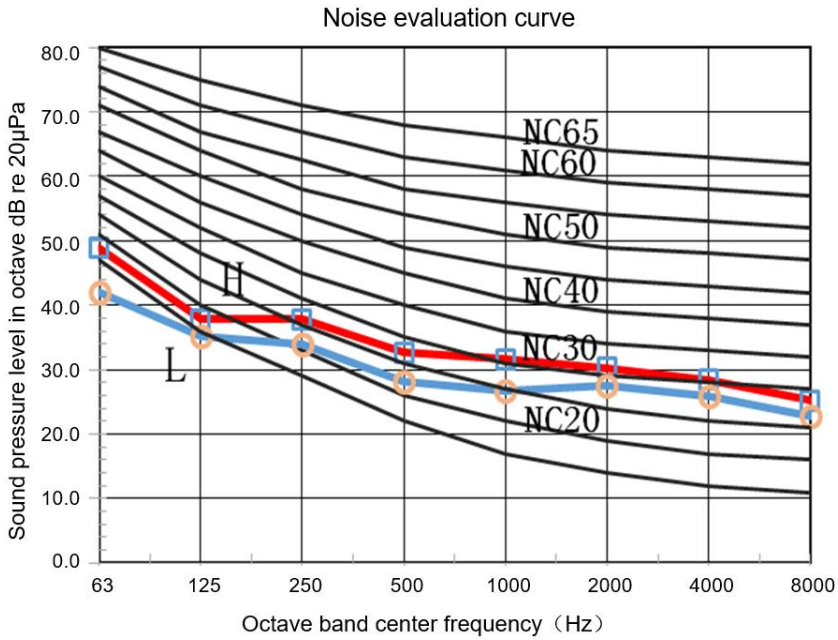

Model GMV-ND12A/A-T(U)

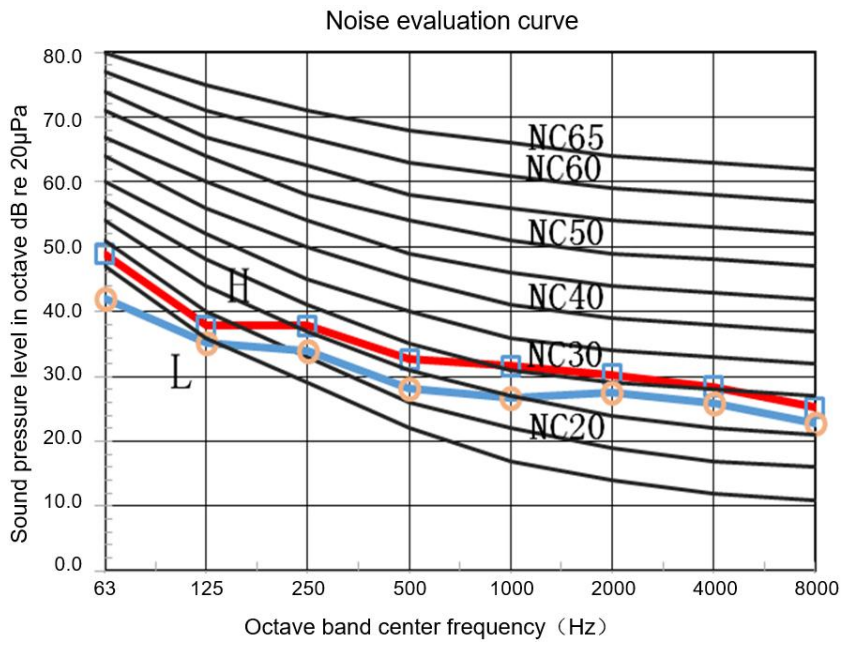

Model GMV-ND18A/A-T(U)

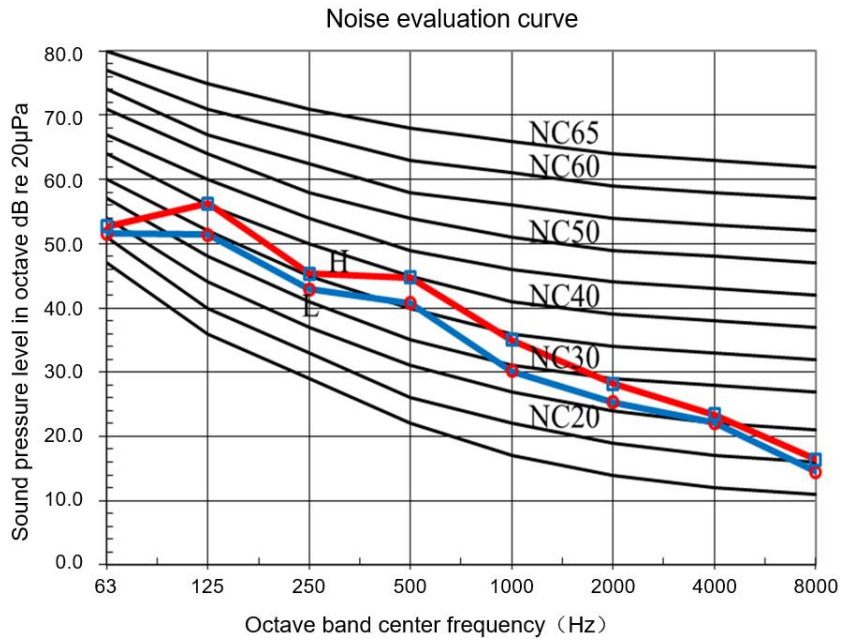

Model GMV-ND24A/A-T(U)

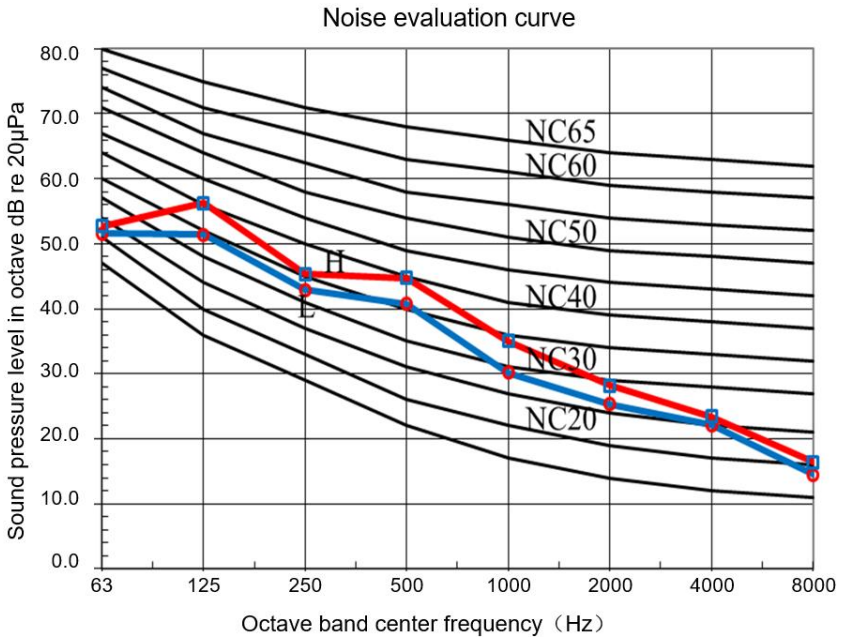

Model GMV-ND30A/A-T(U)

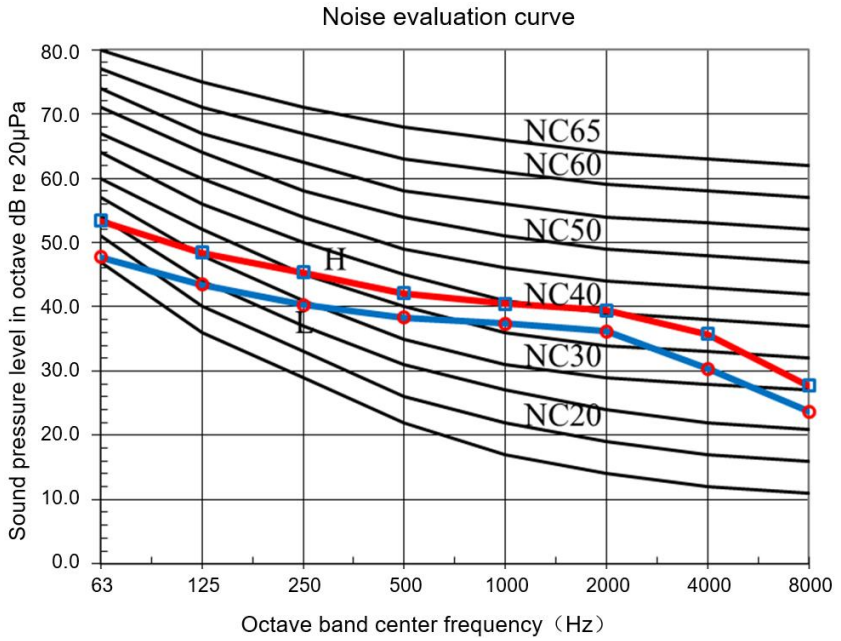

Model GMV-ND36A/A-T(U)

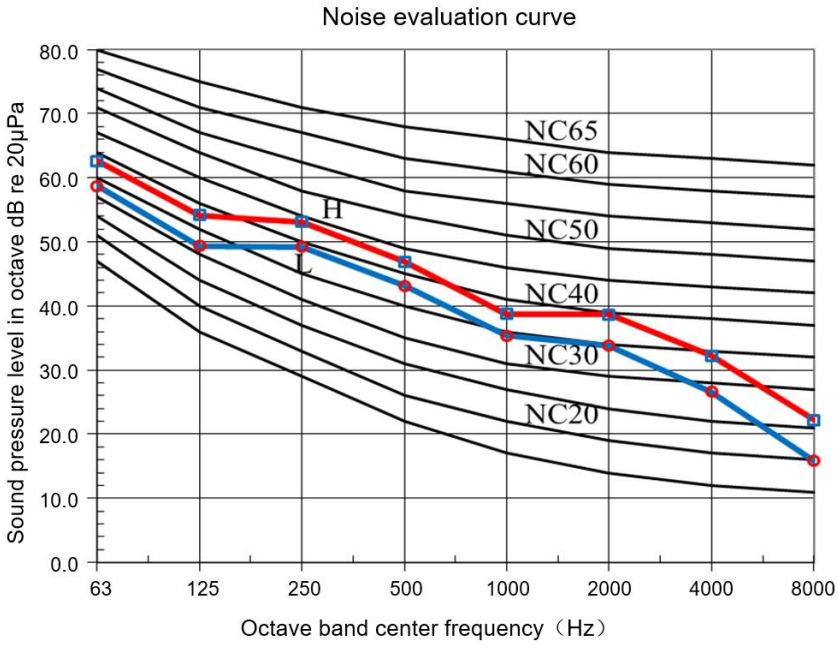

Model GMV-ND42A/A-T(U)

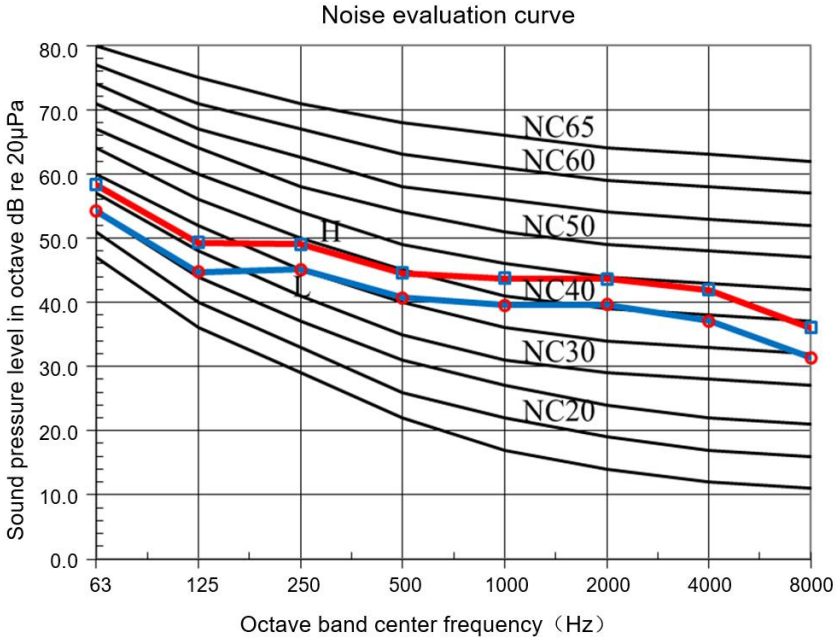

Model GMV-ND48A/A-T(U)

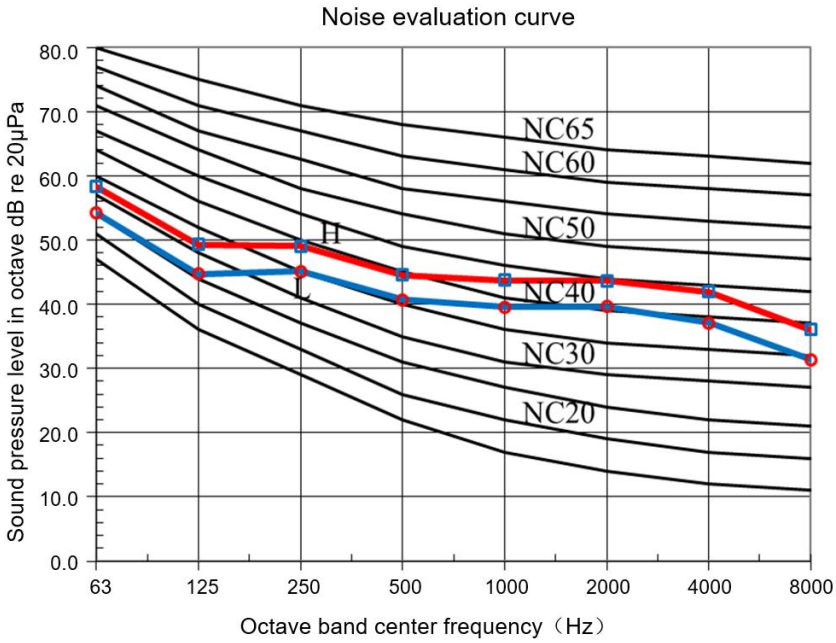

Model GMV-ND54A/A-T(U)

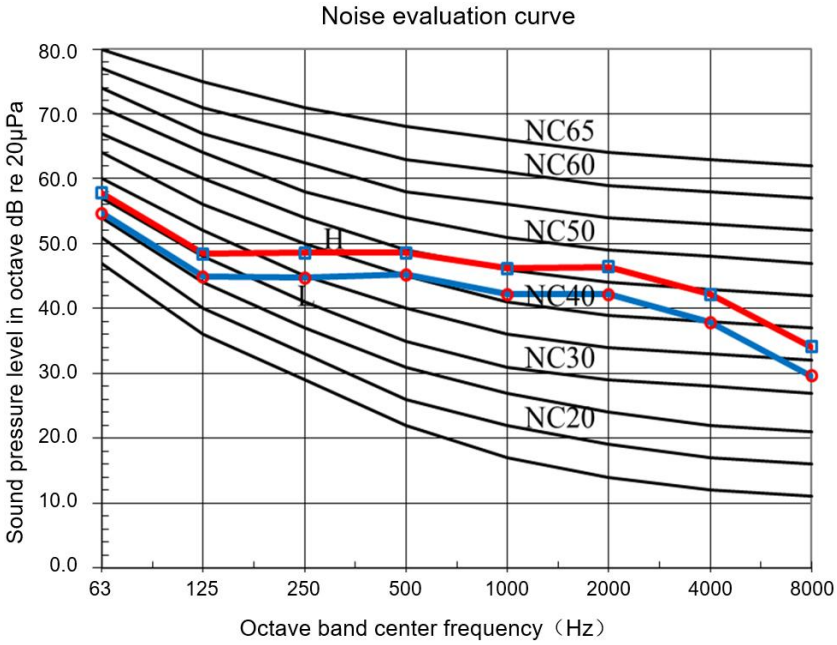

GMV-ND**A/B-T(U)

Model GMV-ND09A/B-T(U)

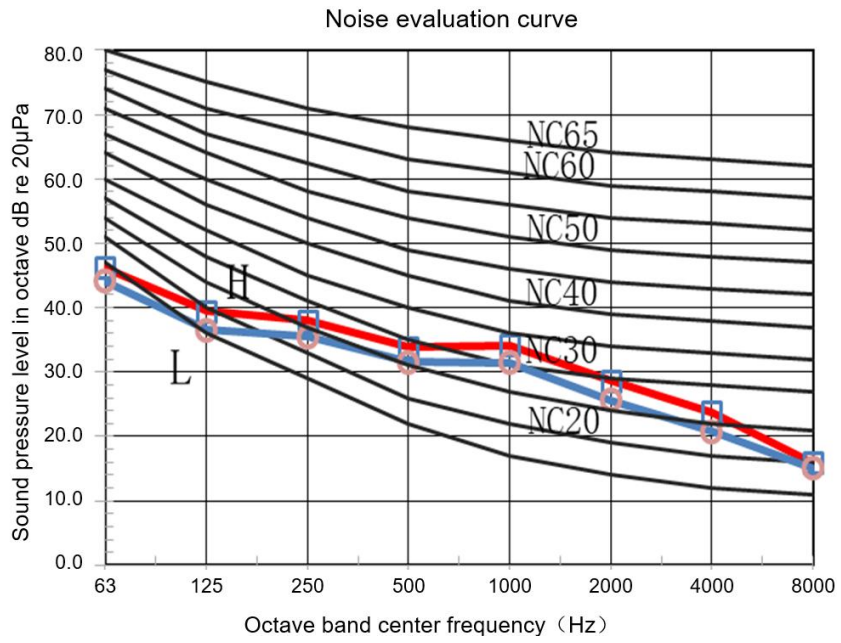

Model GMV-ND12A/B-T(U)

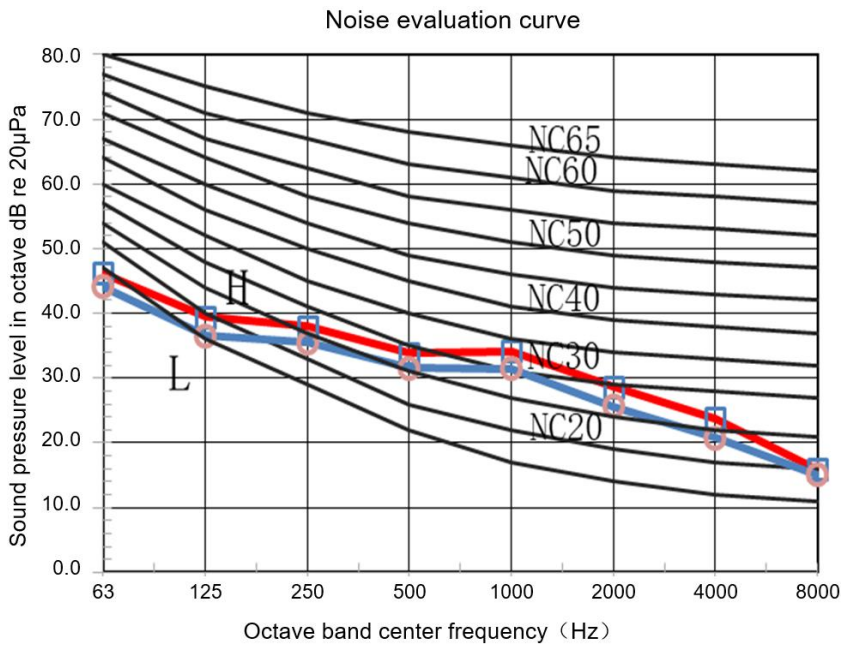

Model GMV-ND18A/B-T(U)

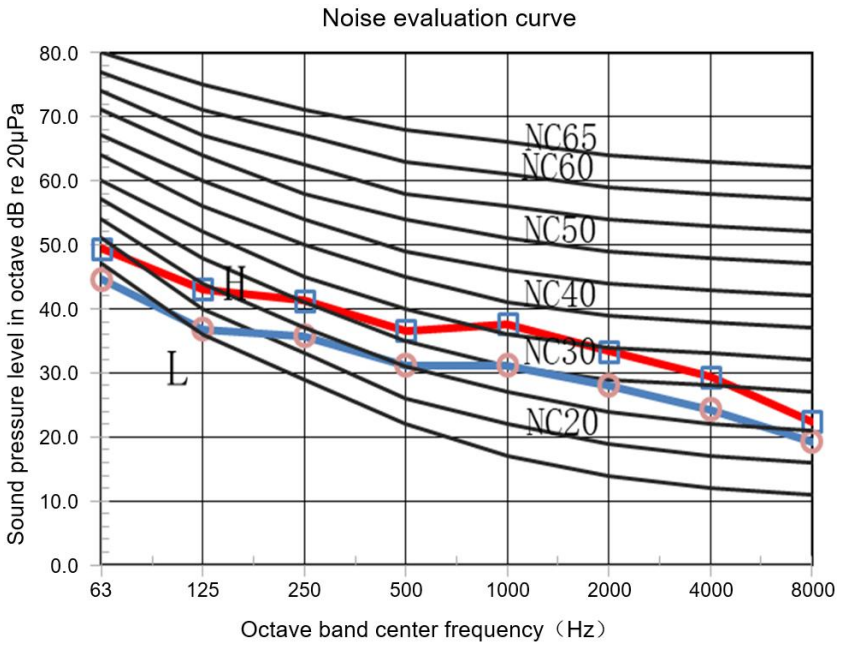

Model GMV-ND24A/B-T(U)

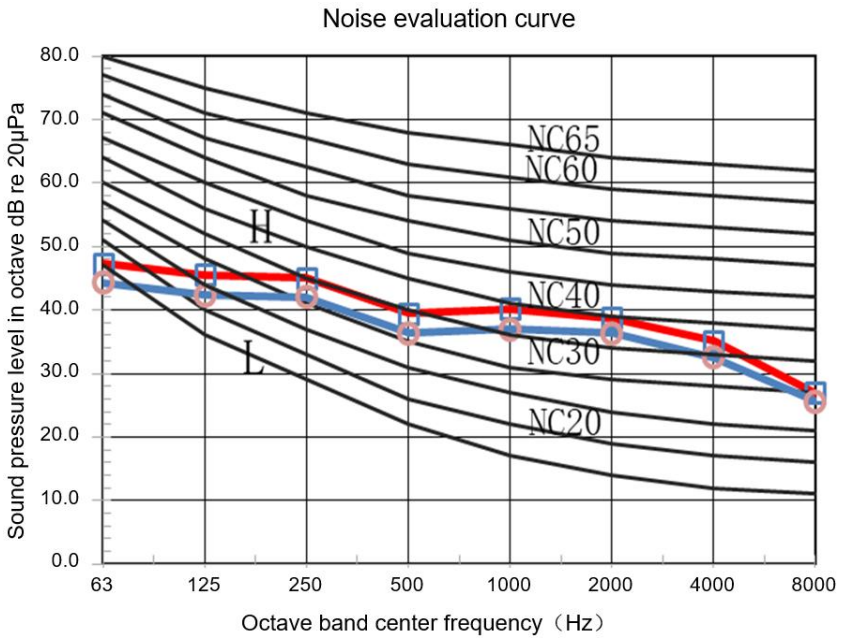

Model GMV-ND30A/B-T(U)

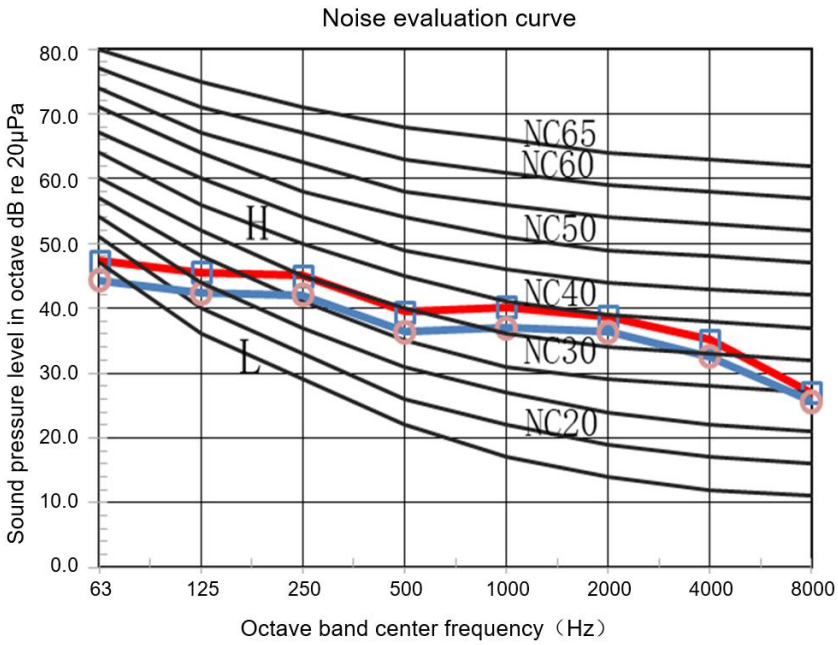

Model GMV-ND36A/B-T(U)

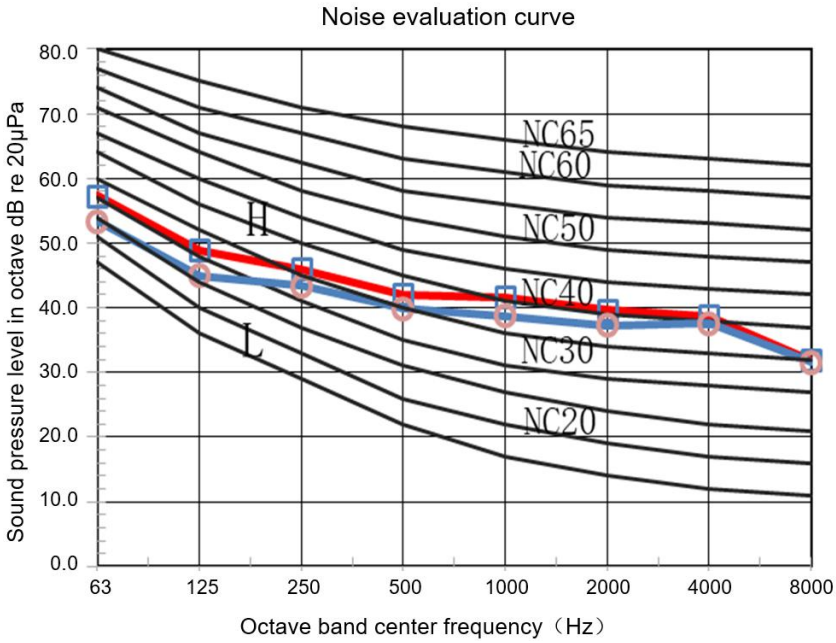

Model GMV-ND42A/B-T(U)

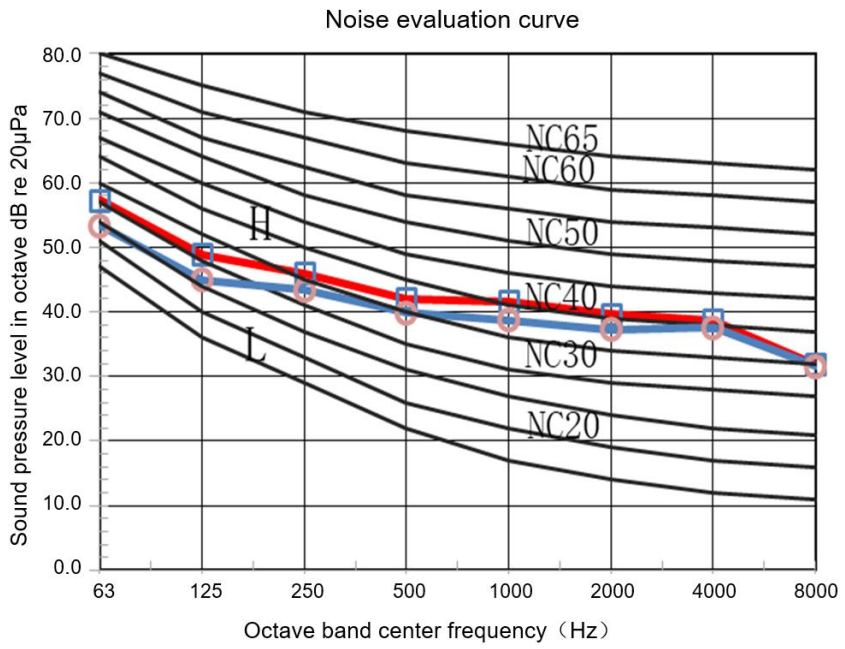

Model GMV-ND48A/B-T(U)

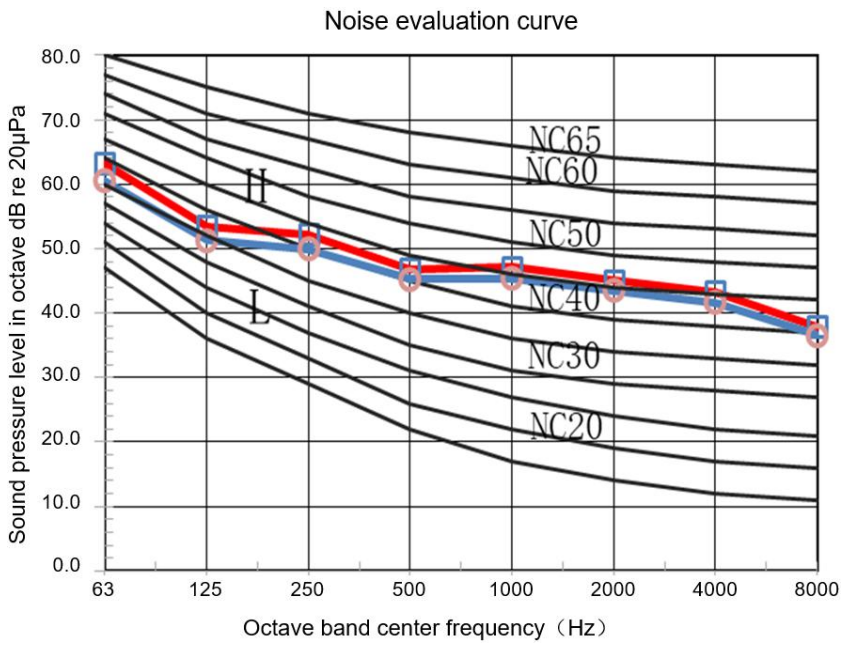

Model GMV-ND54A/B-T(U)

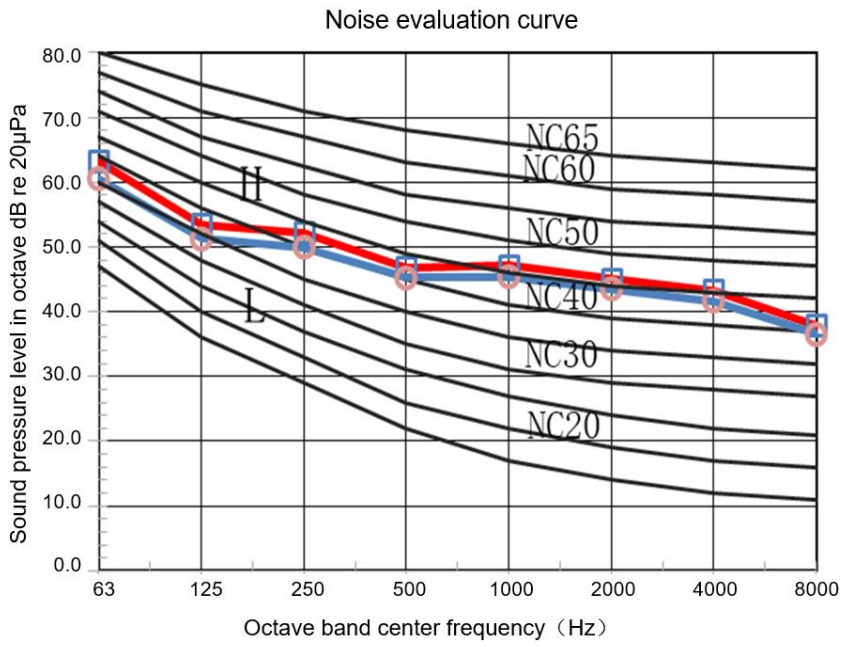

Model GMV-ND60A/B-T(U)

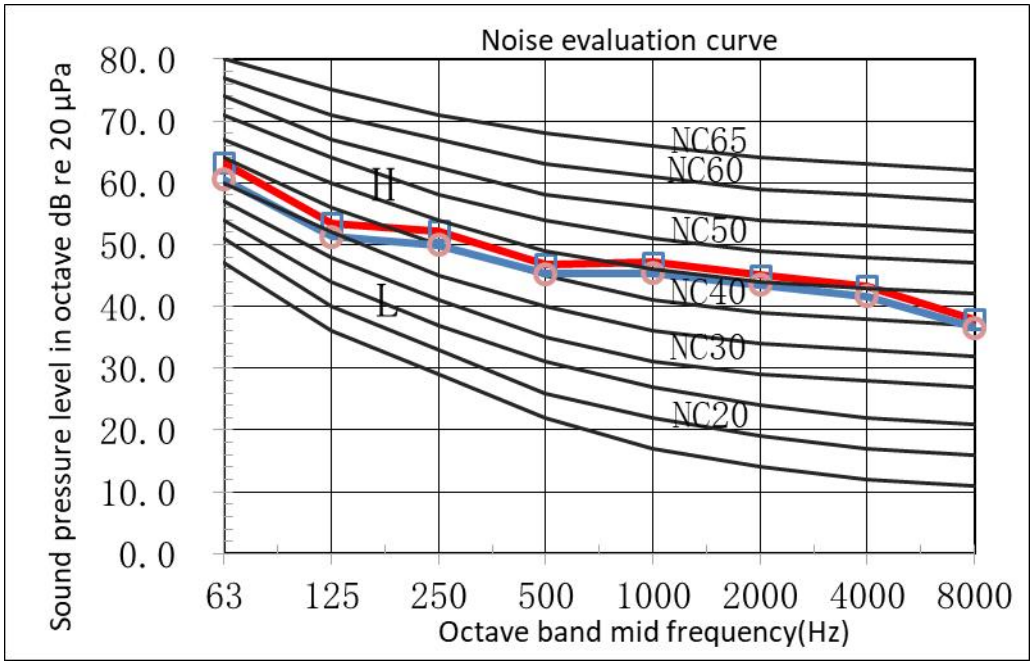

5.13 1-way Cassette Type

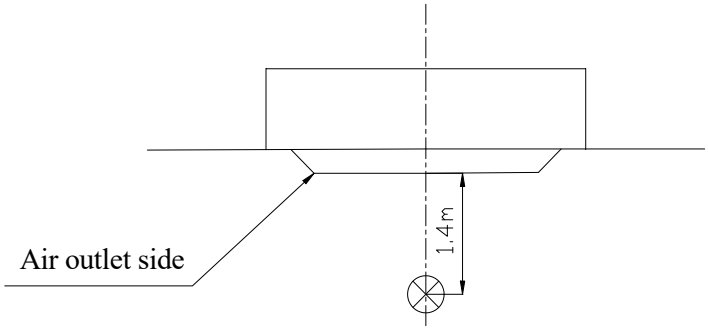

Transandient meter of sound level meter

NOTICE !

a The noise level is measured in the semi-anechoic room. It will be slightly higher due to change of the environment during actual operation.

b The noise level is measured under the standard test condition.

Model 07、09

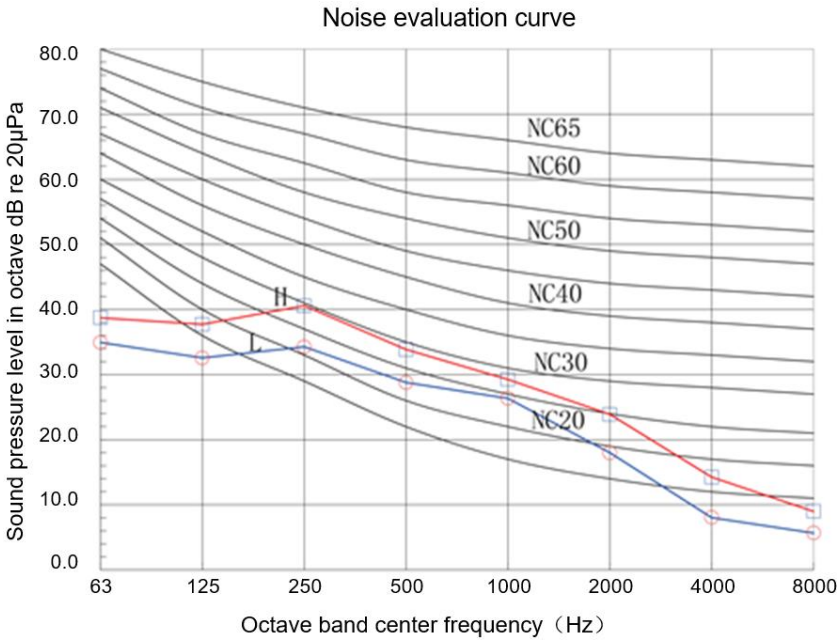

Model 12

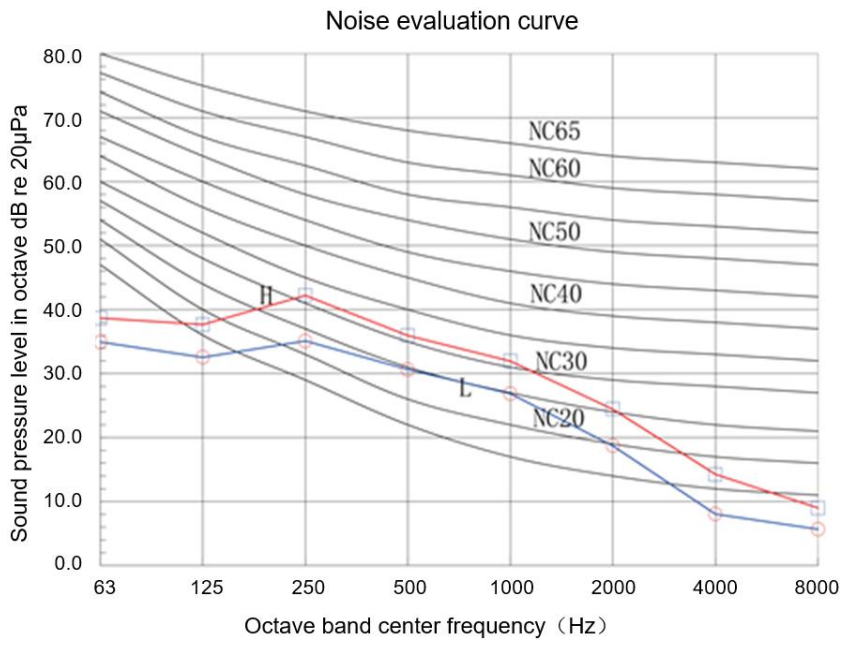

5.14 General Static Pressure Duct Type Indoor Unit GMV-ND**PLS/C-T(U)

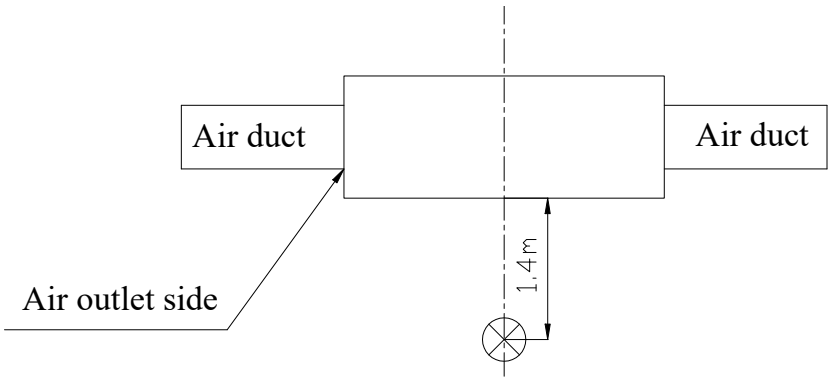

Transandient meter of sound level meter

NOTICE!

a The noise level is measured in the semi-anechoic room. It will be slightly higher due to change of the environment during actual operation.

b The noise level is measured under the standard test condition.

c The noise level is measured under the condition of rear air return. The noise level will be a little higher if the lower air return mode is adopted.

Model GMV-ND30PLS/C-T(U)、GMV-ND36PLS/C-T(U)

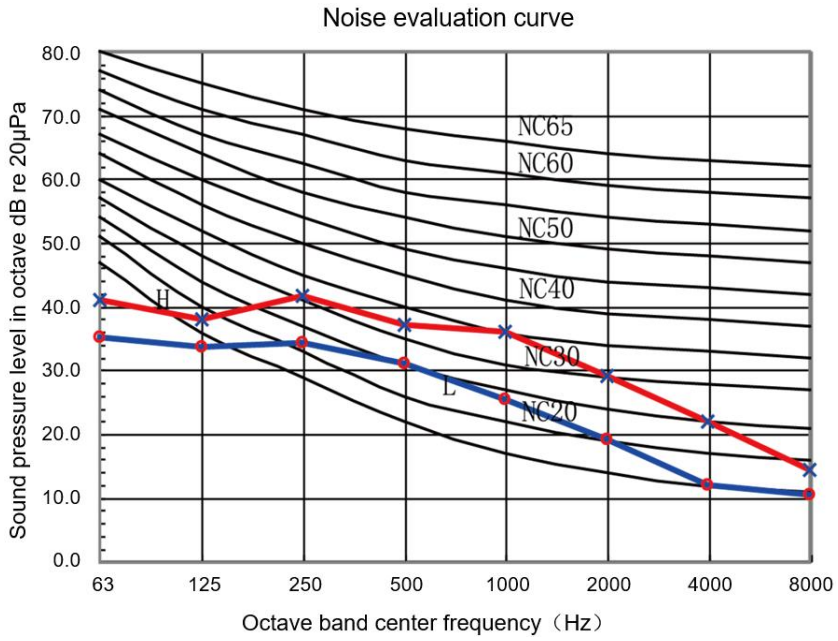

Model GMV-ND42PLS/C-T(U)、GMV-ND48PLS/C-T(U)

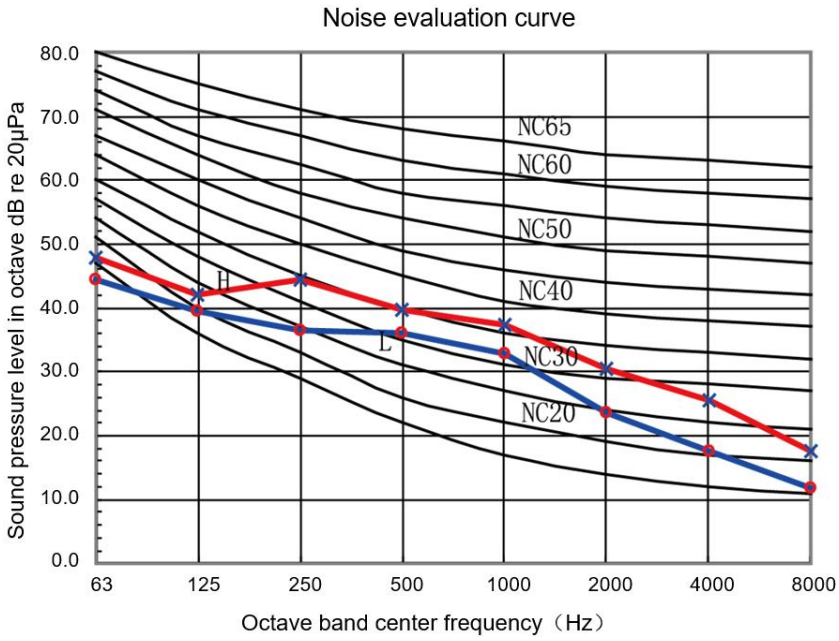

5.15 360°Air Discharge Compact Cassette Type

Model 05、07

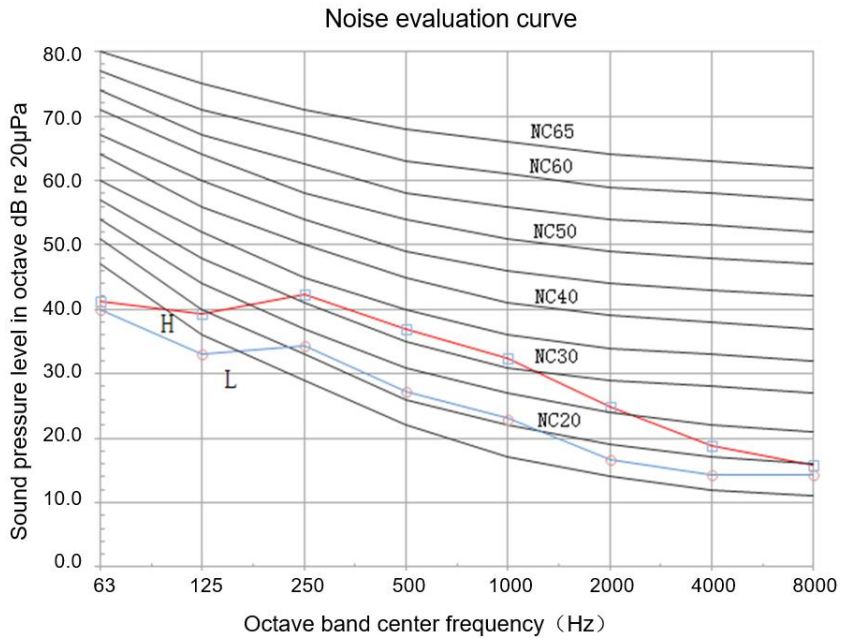

Model 09

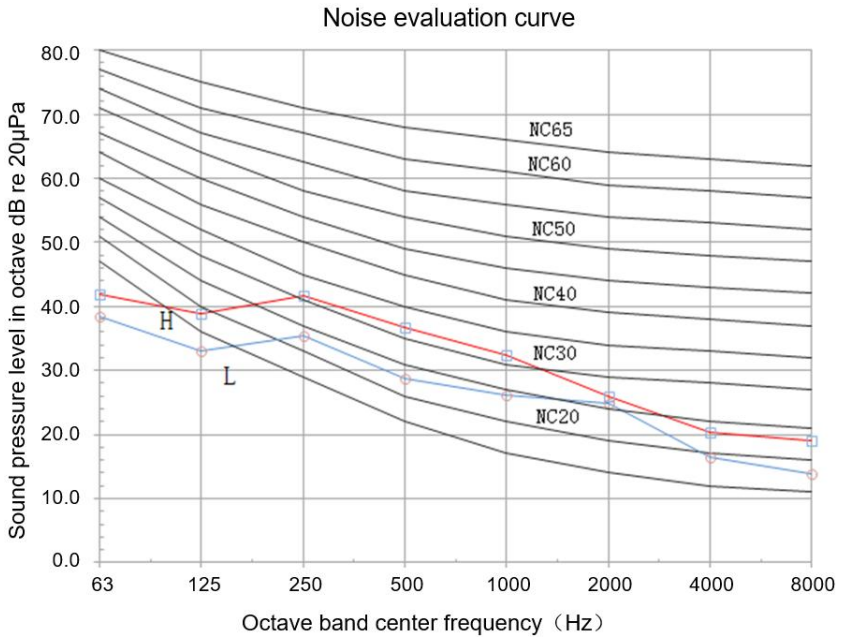

Model 12

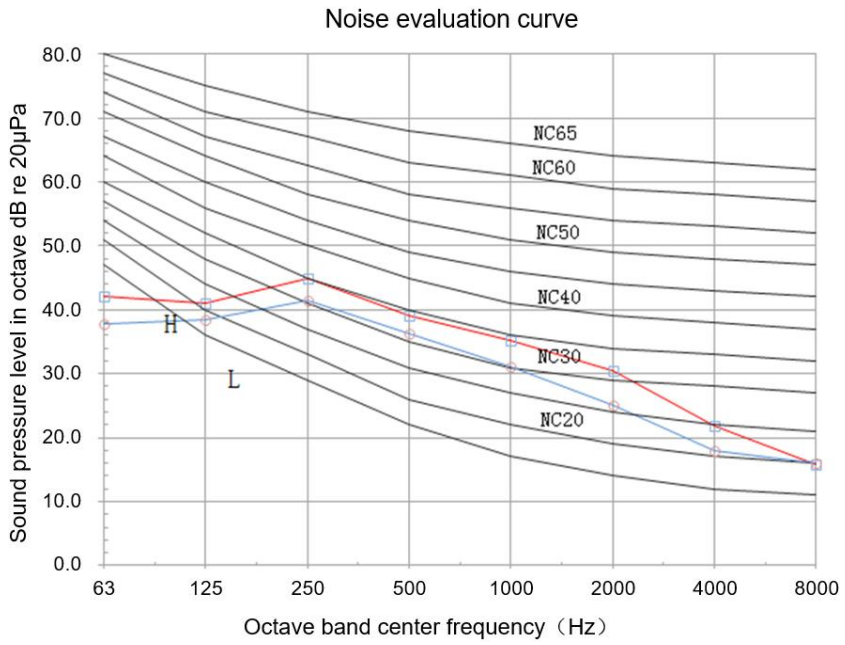

Model 15、18

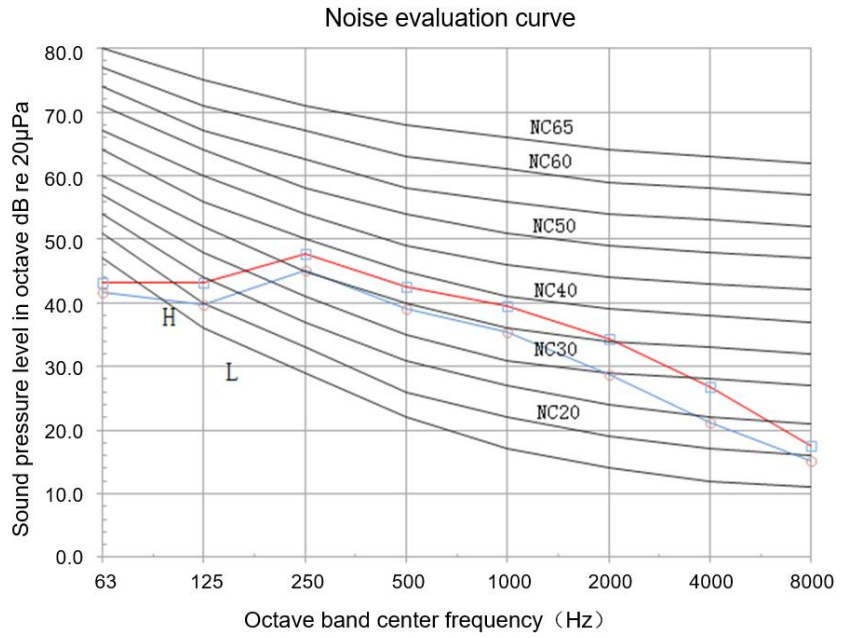

5.16 360°Air Discharge Cassette Type

GMV-ND**T/C-T(U):

Model 07-15

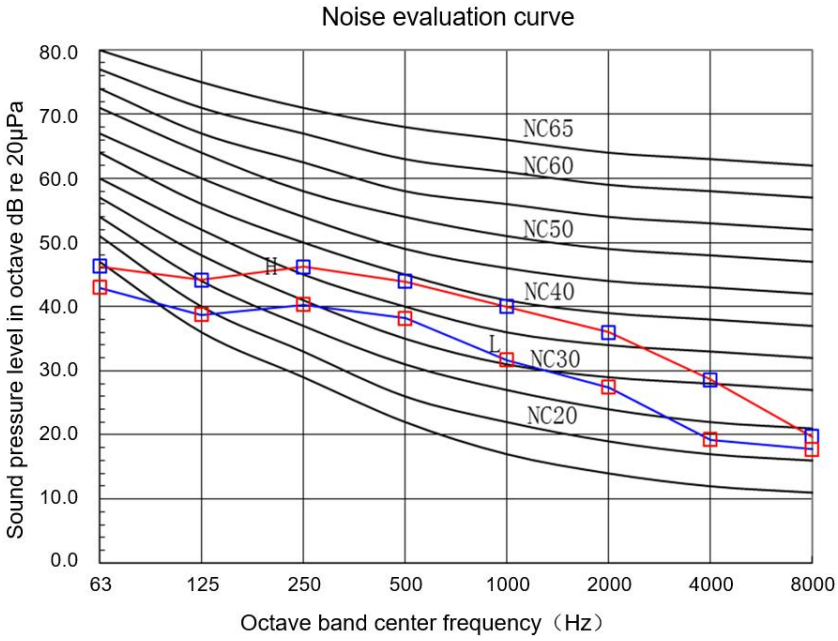

Model 18-24

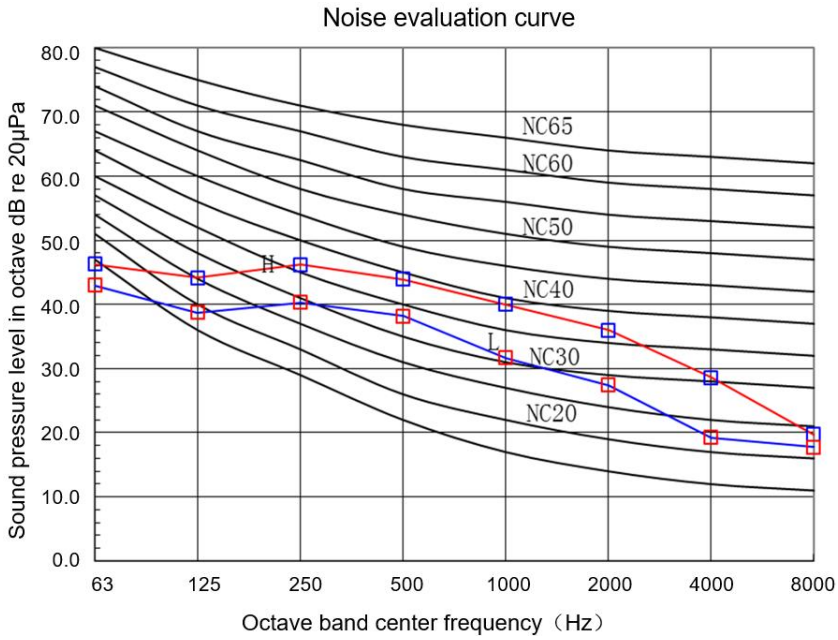

Model 30

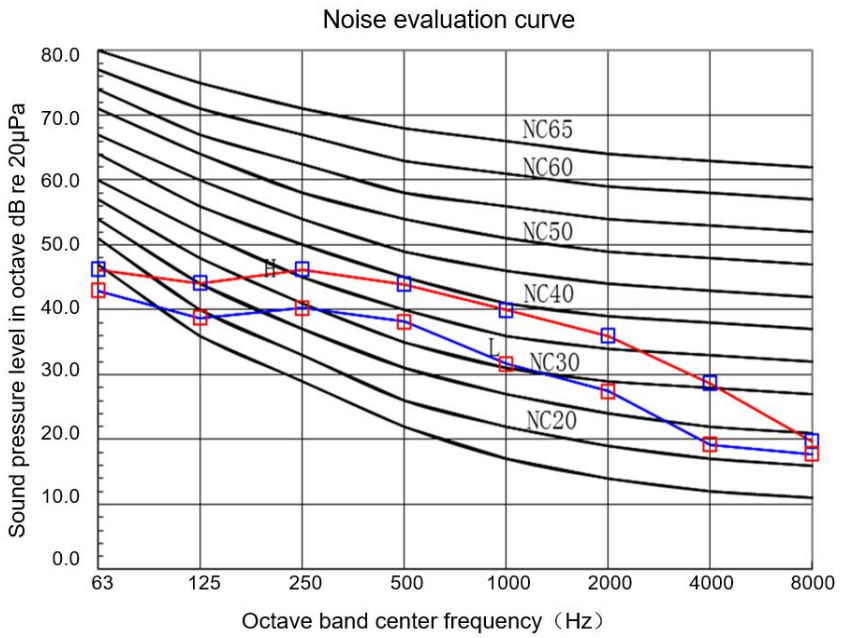

Model 36-48

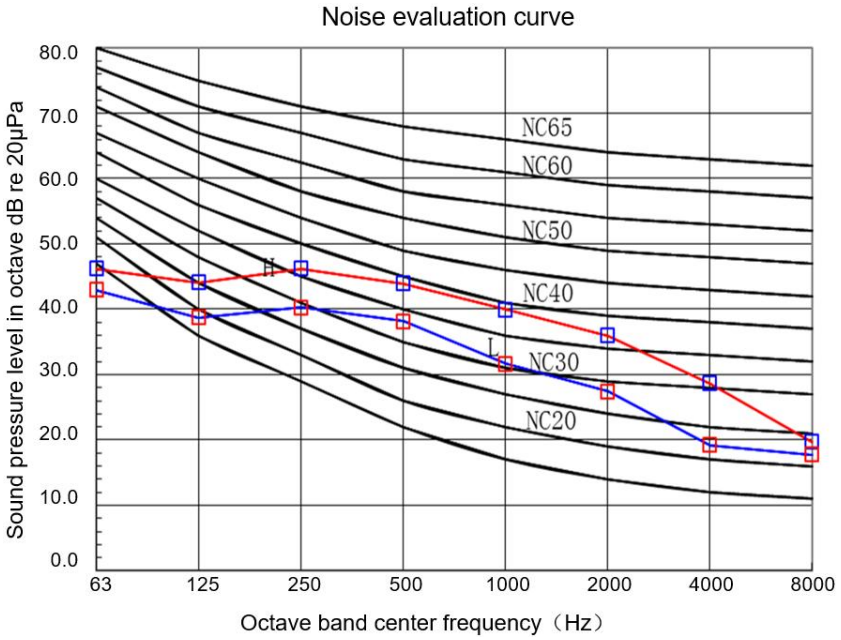

Model 54

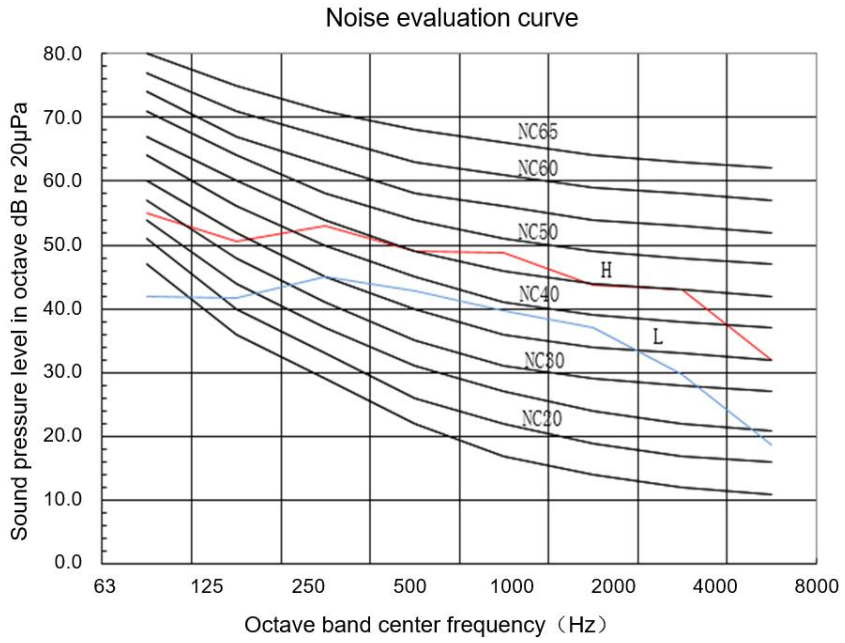

GMV-ND**T/D-T(U):

Model 07-15

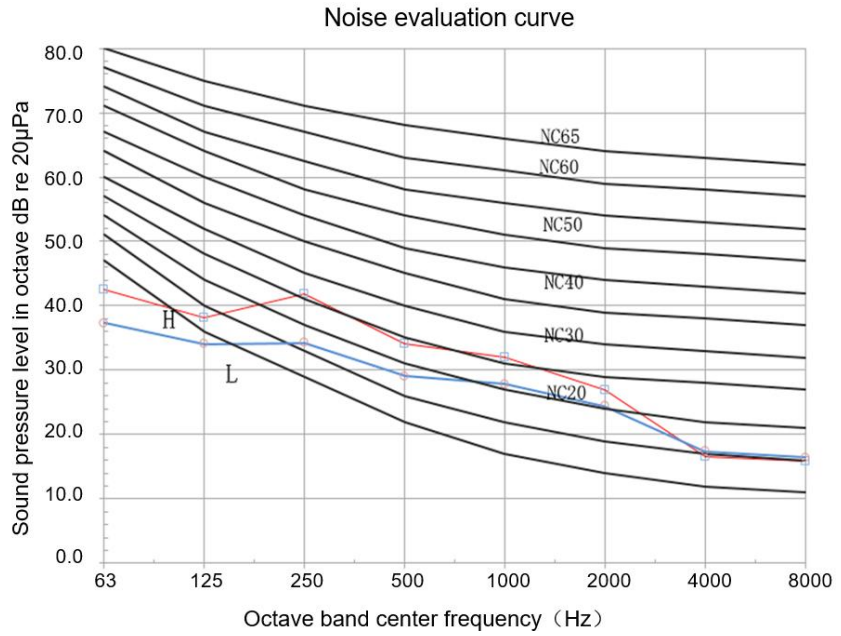

Model 18-22

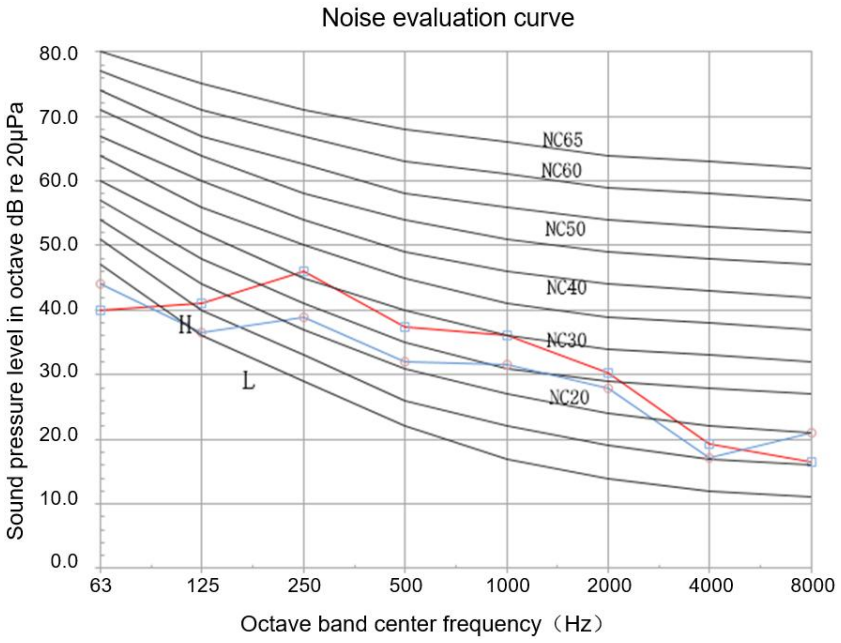

Model 24

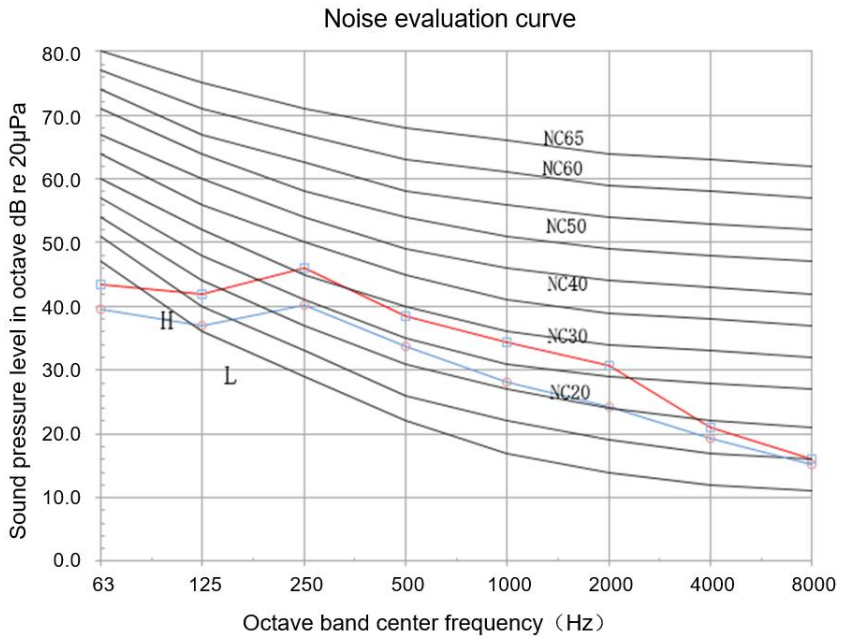

Model 30-36

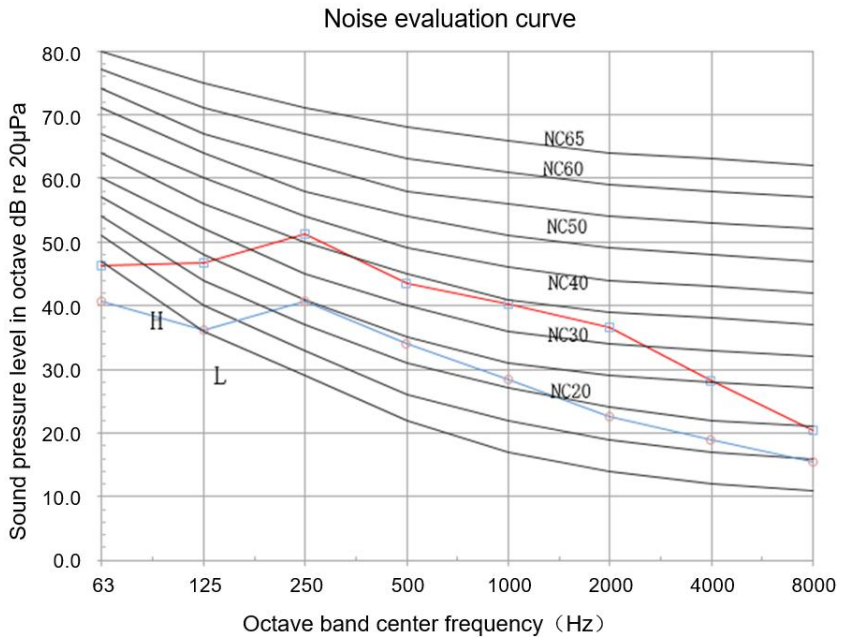

Model 42-48

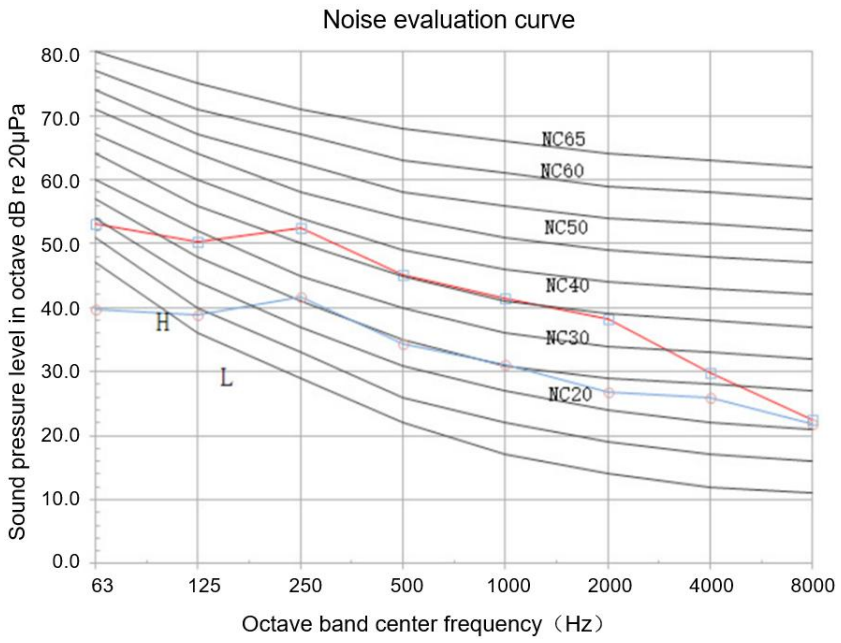

6. Fan Characteristics

6.1 Low ESP Duct Type

GMV-ND07PLS/A-T(U)
GMV-ND09PLS/A-T(U)

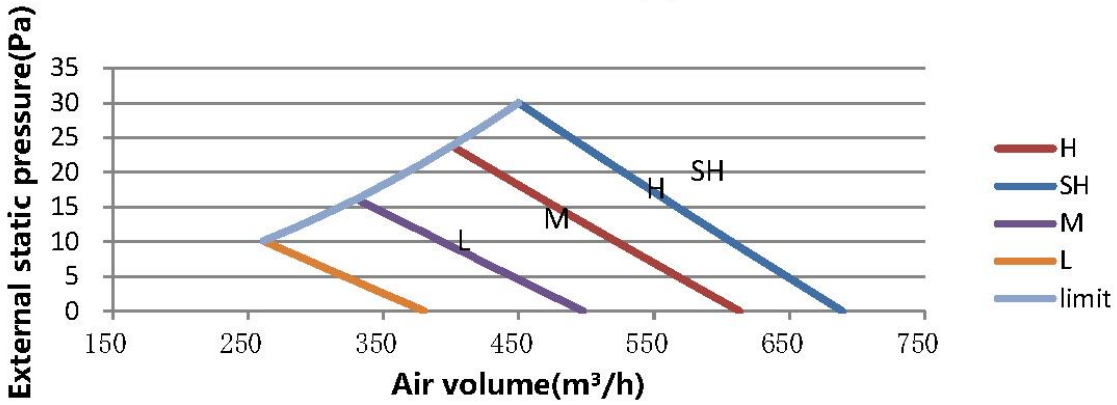

GMV-ND12PLS/A-T(U)

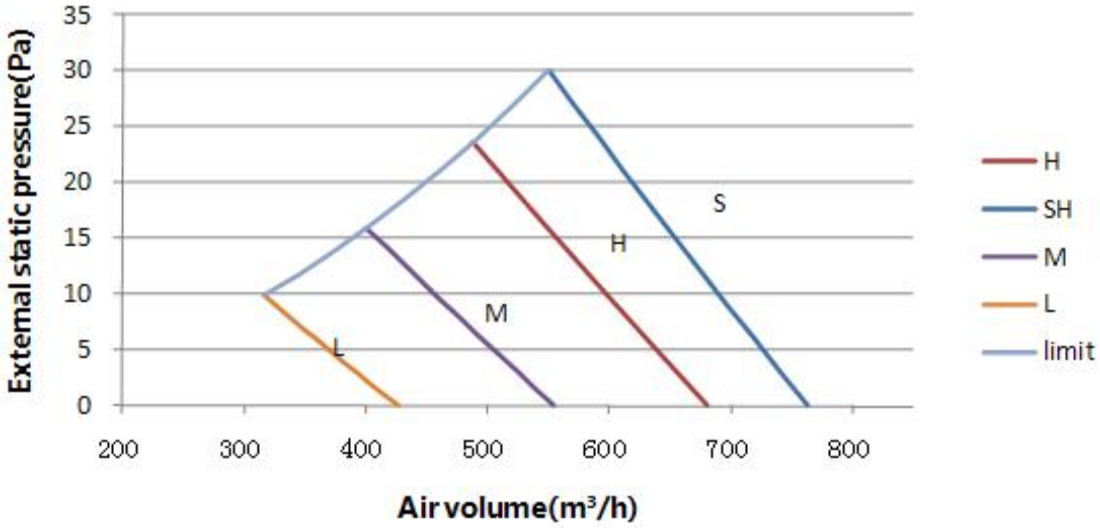

GMV-ND14PLS/A-T(U)

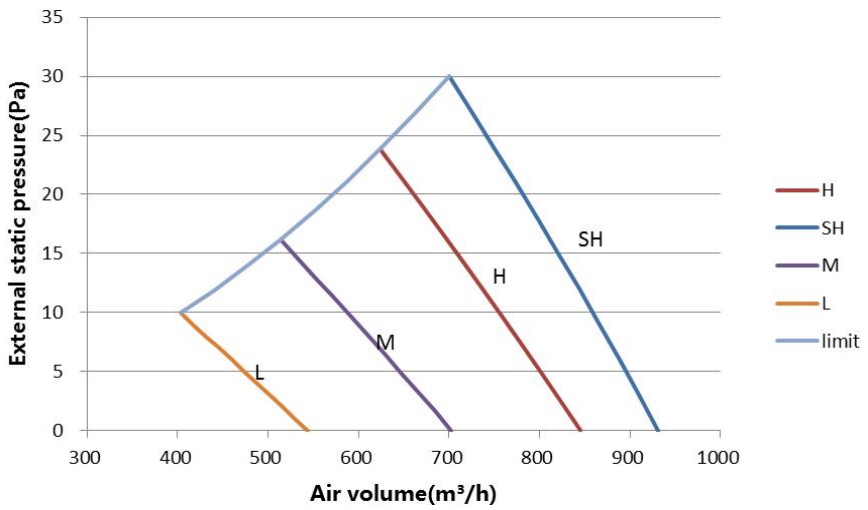

GMV-ND18PLS/A-T(U)
GMV-ND22PLS/A-T(U)

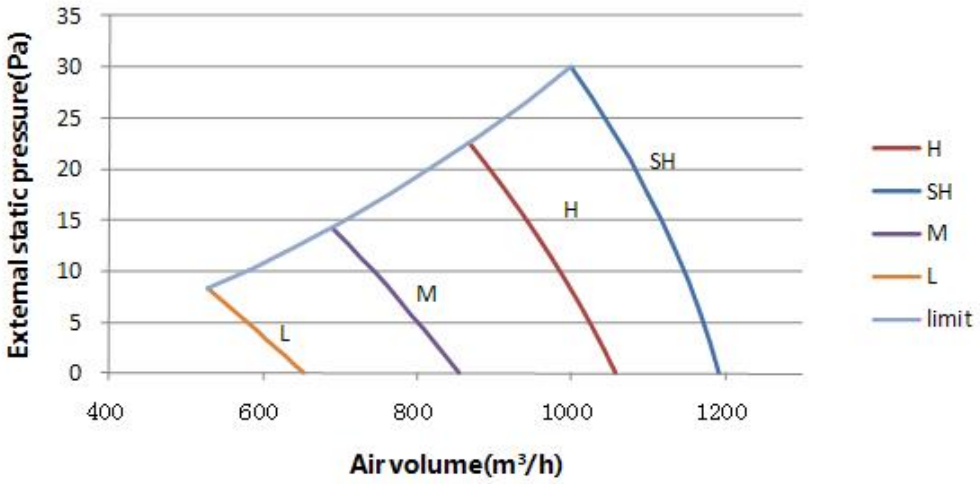

GMV-ND05PLS/B1-T(U)
GMV-ND07PLS/B1-T(U)
GMV-ND09PLS/B1-T(U)

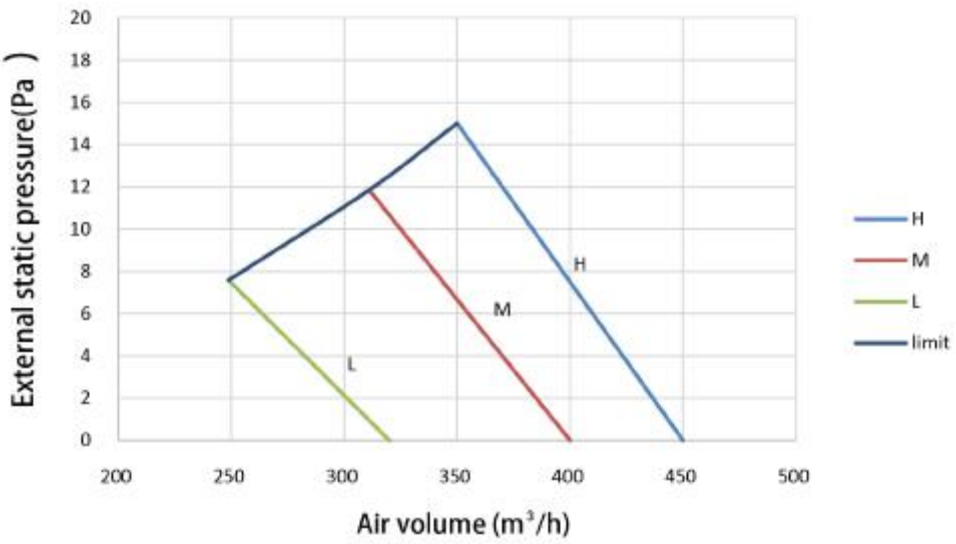

GMV-ND12PLS/B1-T(U)

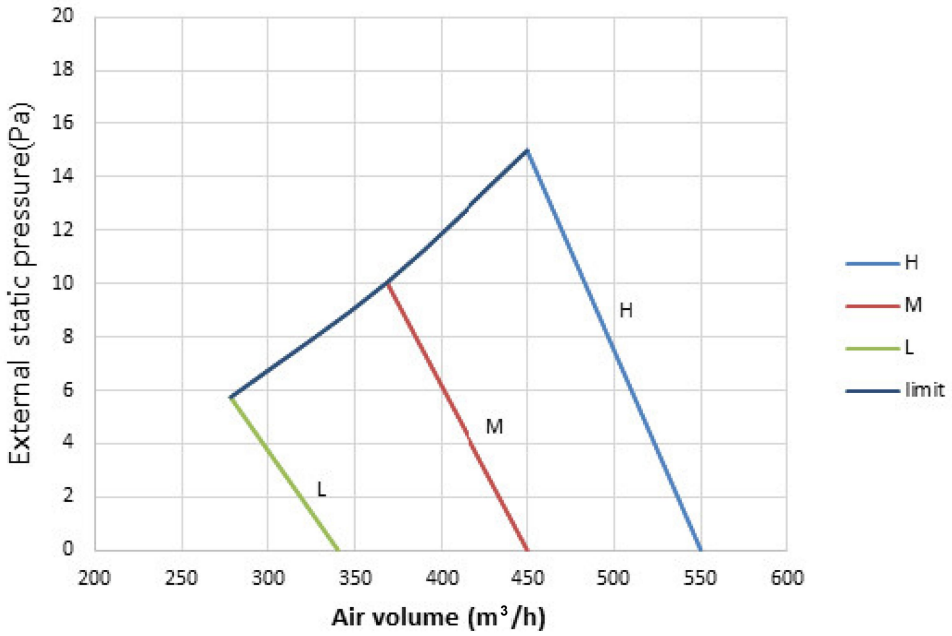

GMV-ND14PLS/B1-T(U)

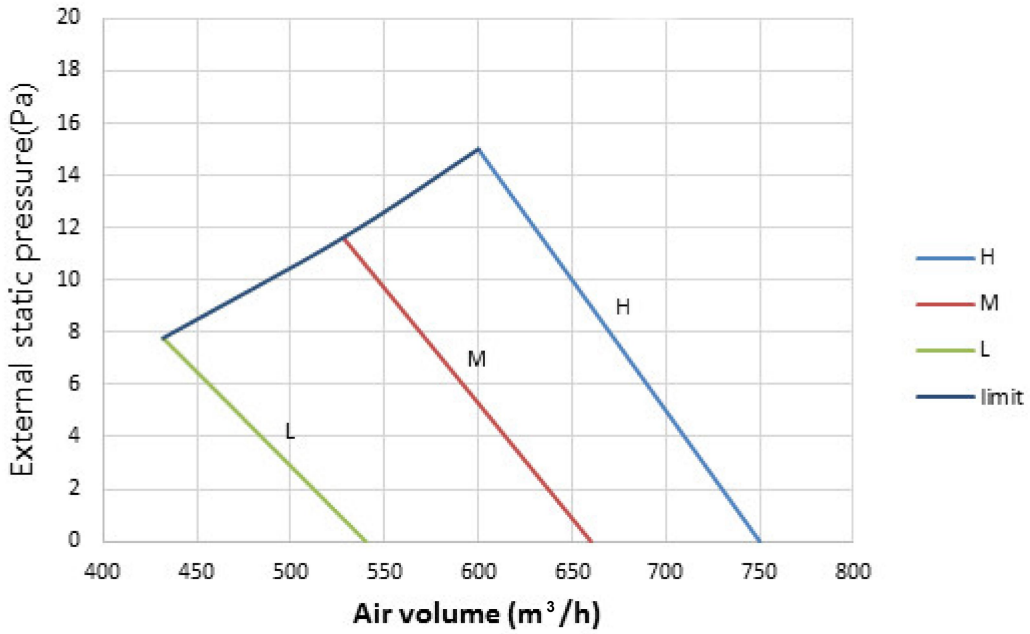

GMV-ND18PLS/B1-T(U)

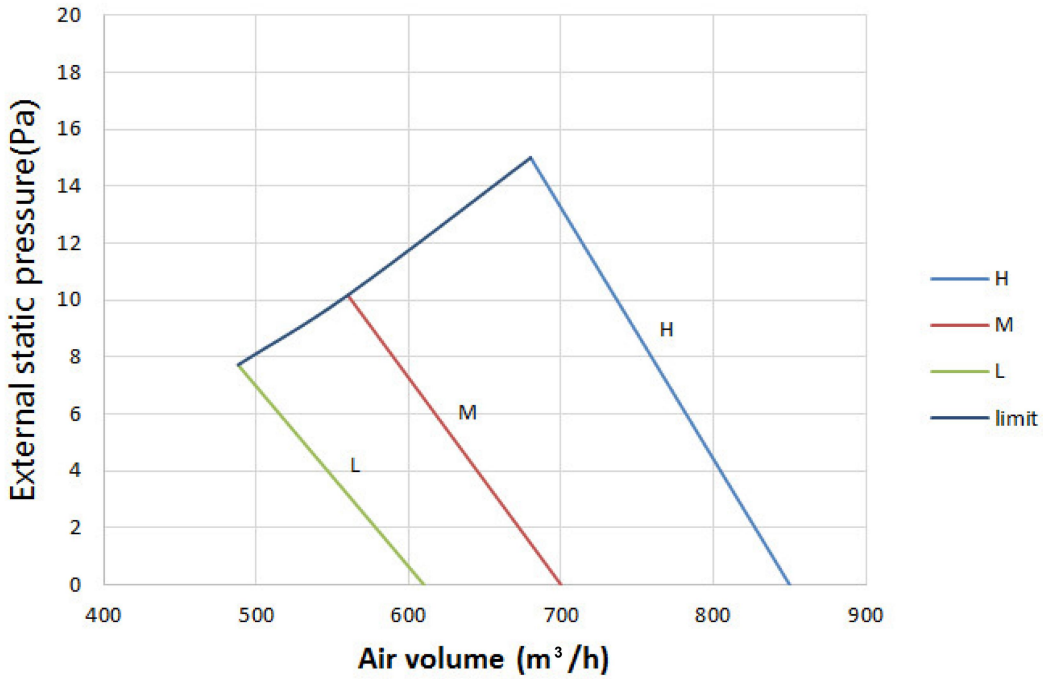

GMV-ND24PLS/B1-T(U)

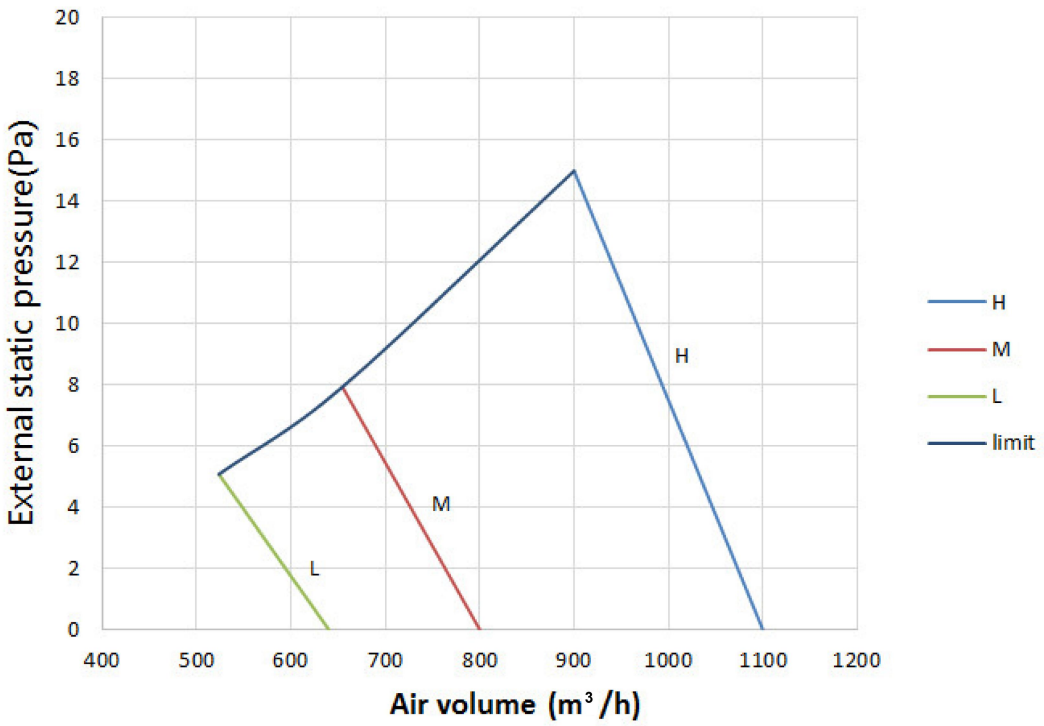

6.2 Slim Duct Type Indoor Unit

GMV-ND07PLS/B-T(U)
GMV-ND09PLS/B-T(U)

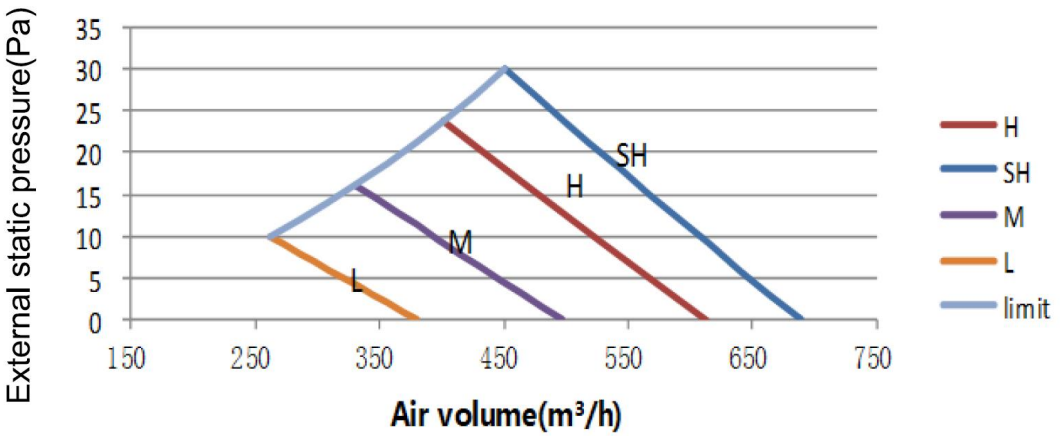

GMV-ND12PLS/B-T(U)

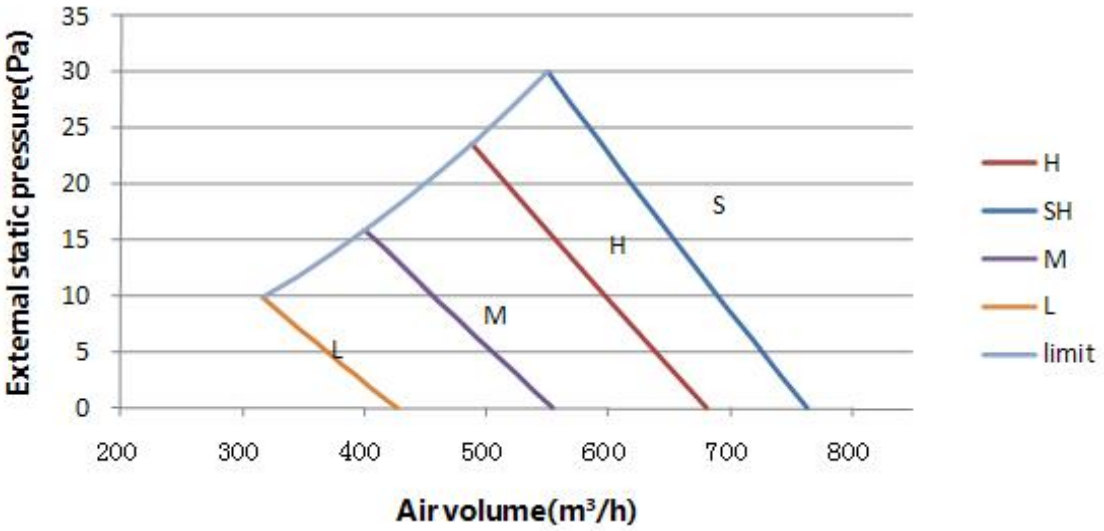

GMV-ND14PLS/B-T(U)

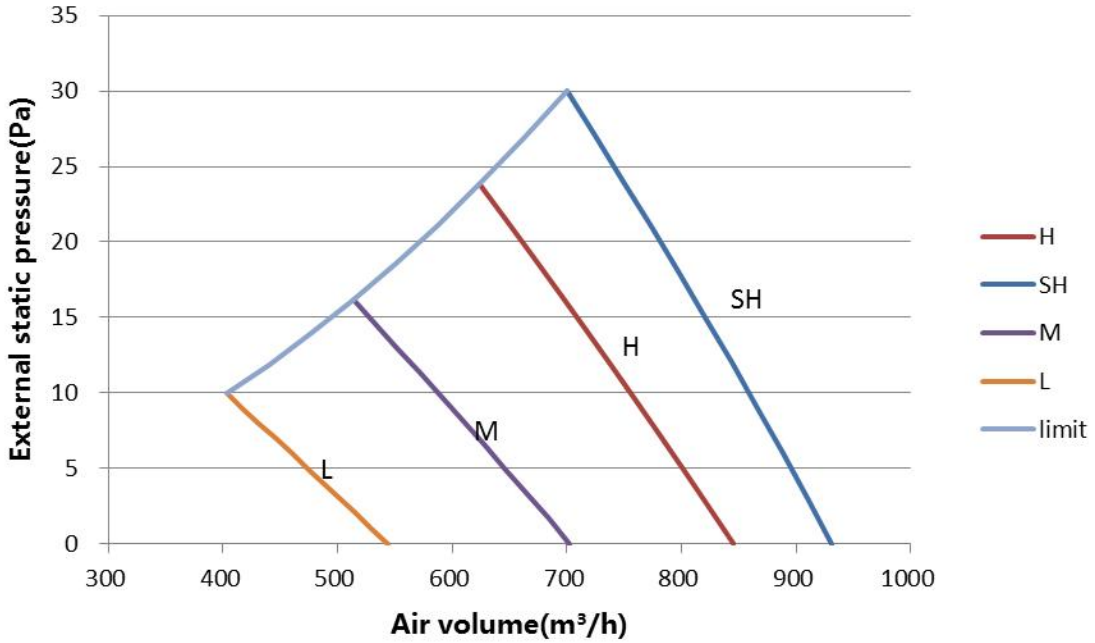

GMV-ND18PLS/B-T(U)
GMV-ND24PLS/B-T(U)

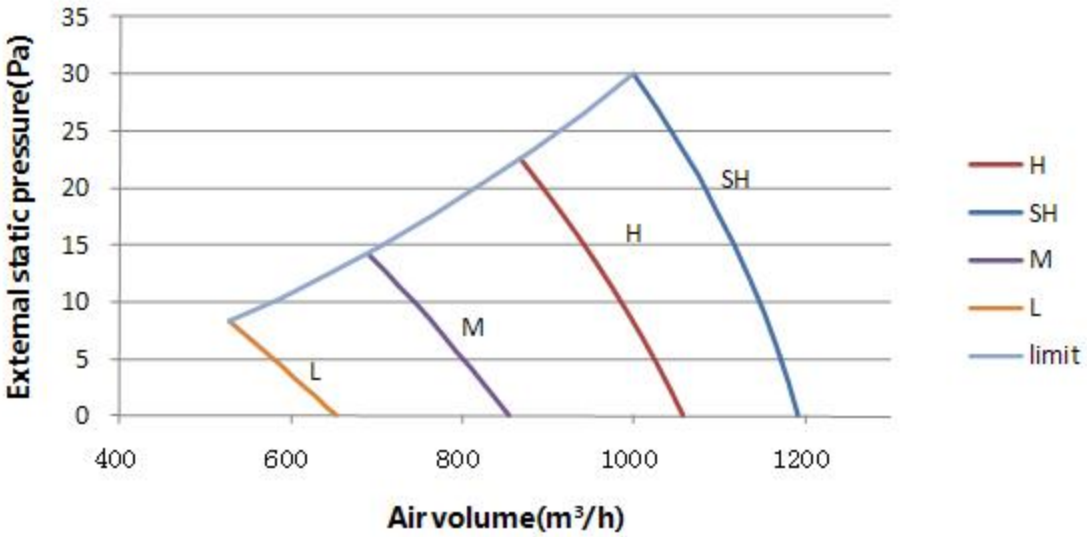

6.3 High ESP Duct Type

GMV-ND18PHS/A-T(U)
GMV-ND24PHS/A-T(U)

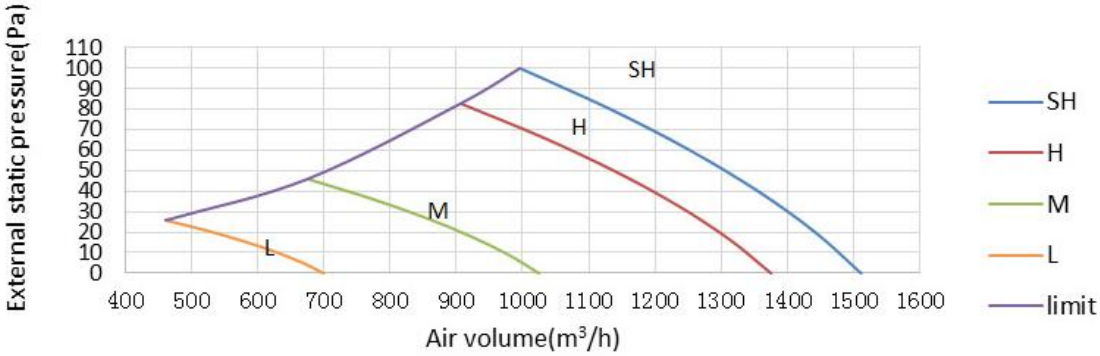

GMV-ND30PHS/A-T(U)
GMV-ND36PHS/A-T(U)

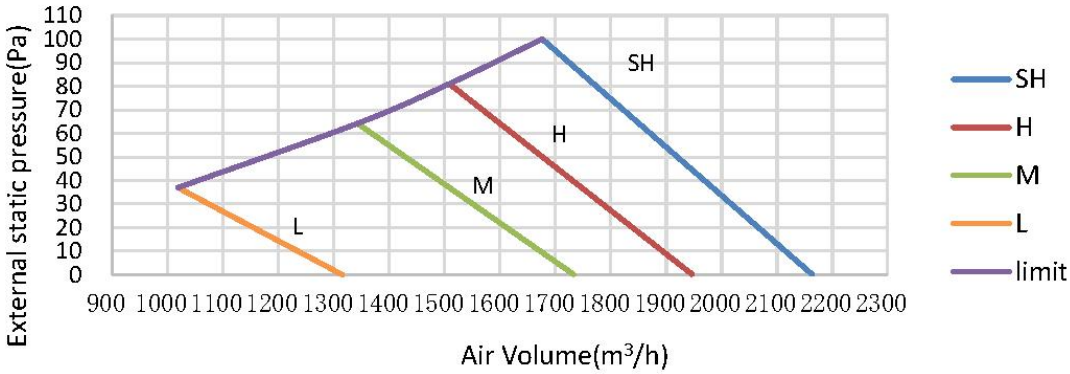

GMV-ND42PHS/A-T(U)

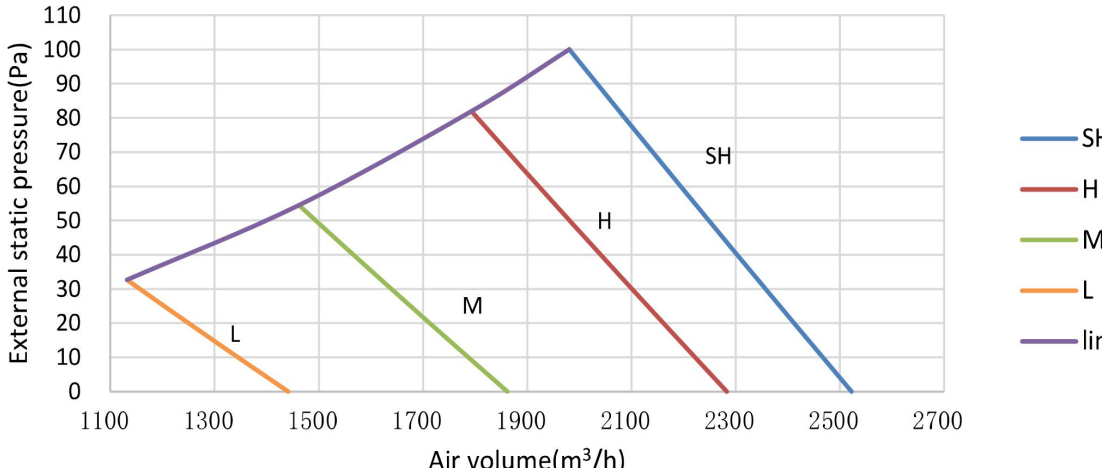

GMV-ND48PHS/A-T(U)

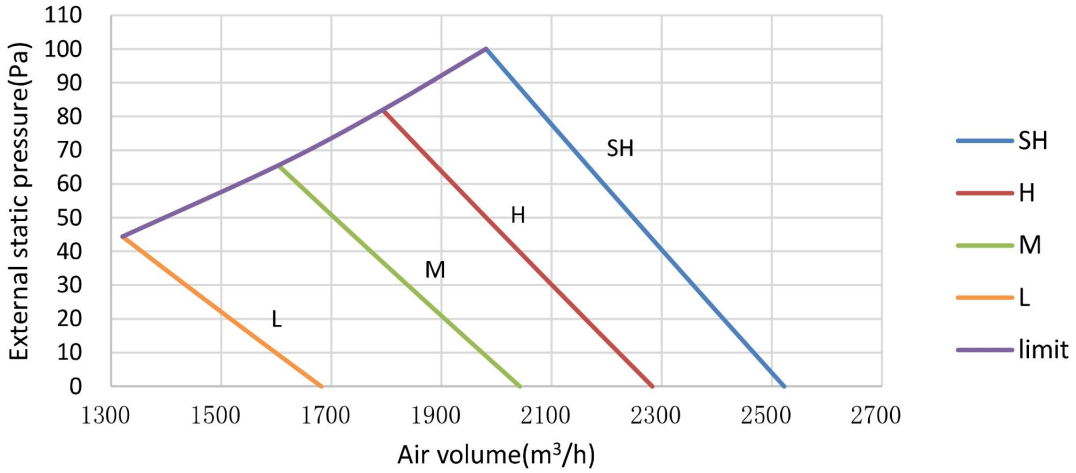

GMV-ND72PH/A-T(U)

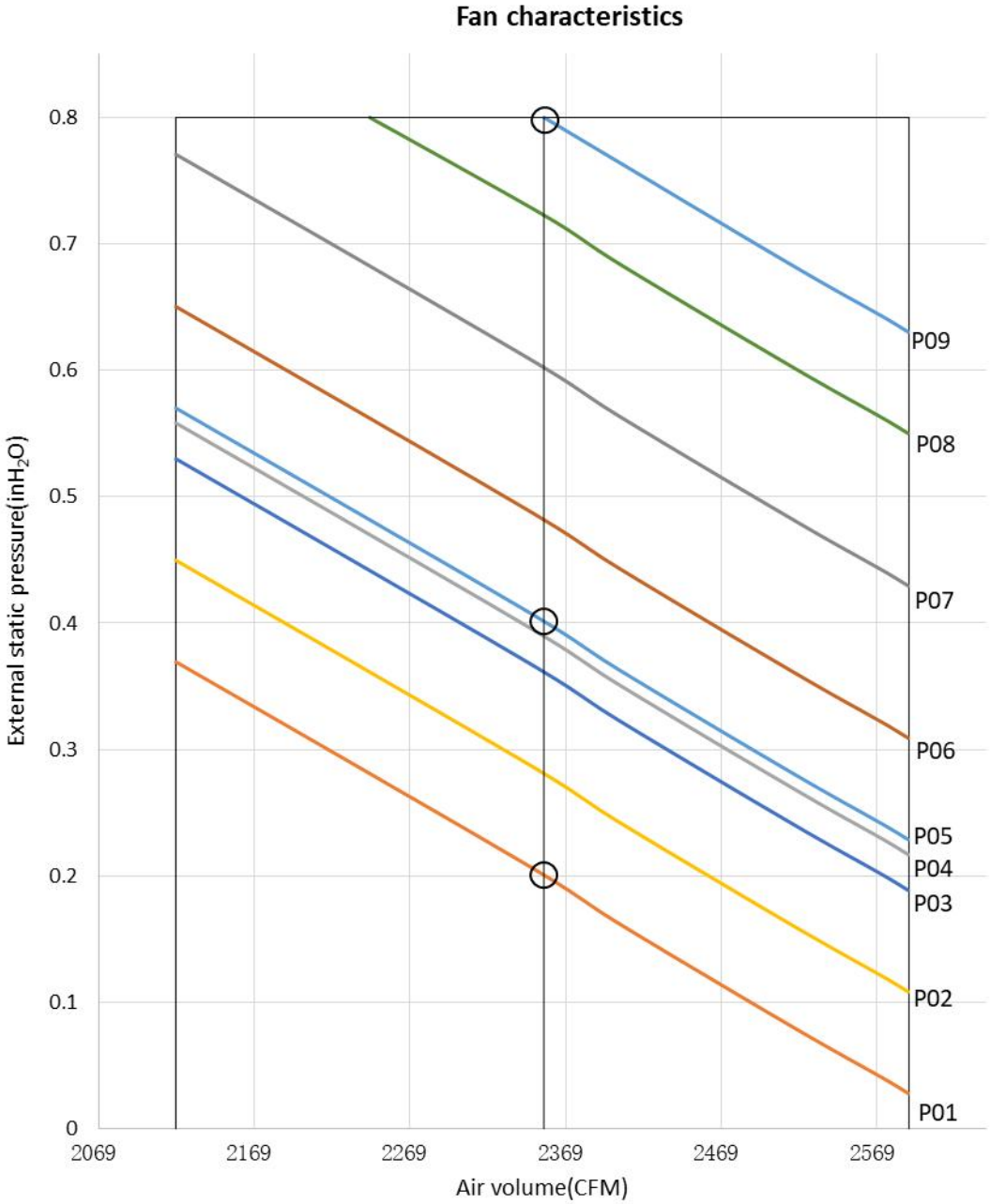

NOTE: Air volume range in [H].

GMV-ND96PH/A-T(U)

Fan characteristics

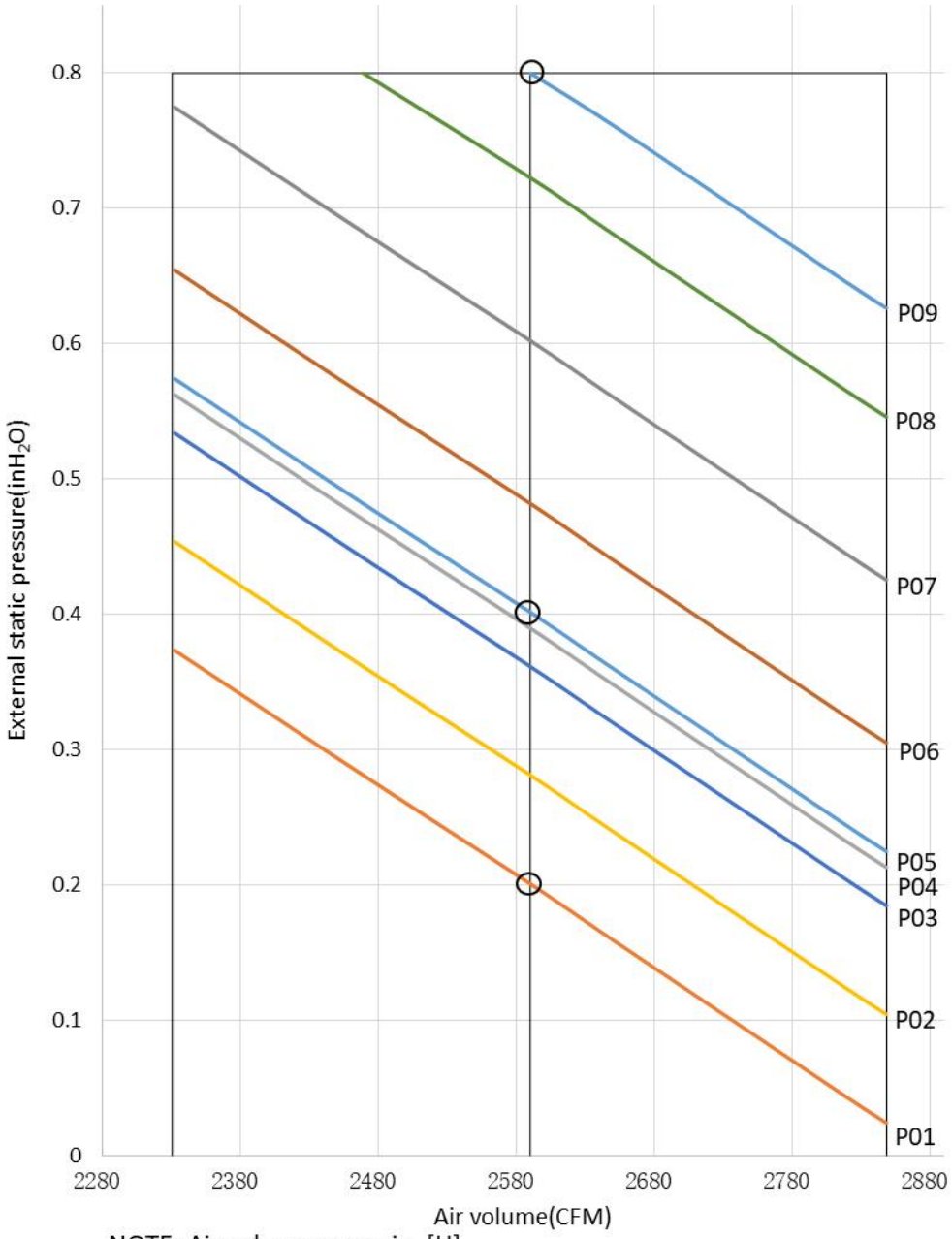

NOTE: Air volume range in [H].

6.4 Fresh Air Processing Indoor Unit

When this unit is installed, select the static pressure according to the actual air volume from 2000~3500m³/h. There're 13 static pressure notches for selection. Please refer to the Installation, Debugging and Maintenance Manual for the adjustment method for the static pressure. The curve diagram between air volume and static pressure is as below. The corresponding static pressure is from notch 1 to notch 13 for the curve from lower to upper side.

GMV-NDX42P/A-T(U)、GMV-NDX48P/A-T(U)

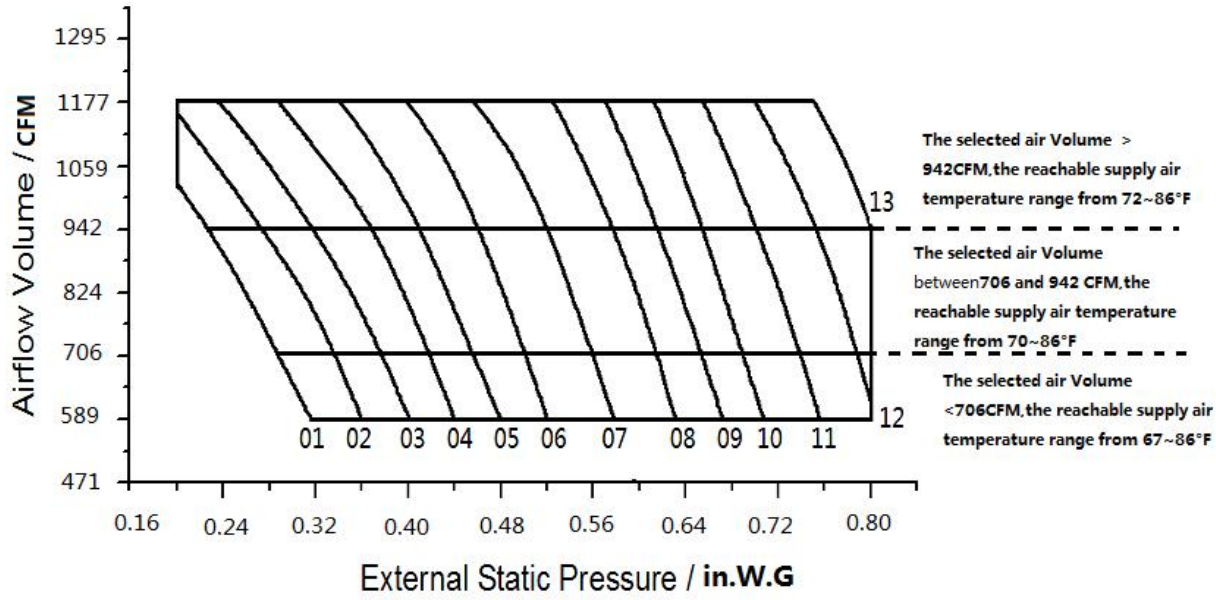

GMV-NDX54P/A-T(U)、GMV-NDX72P/A-T(U)

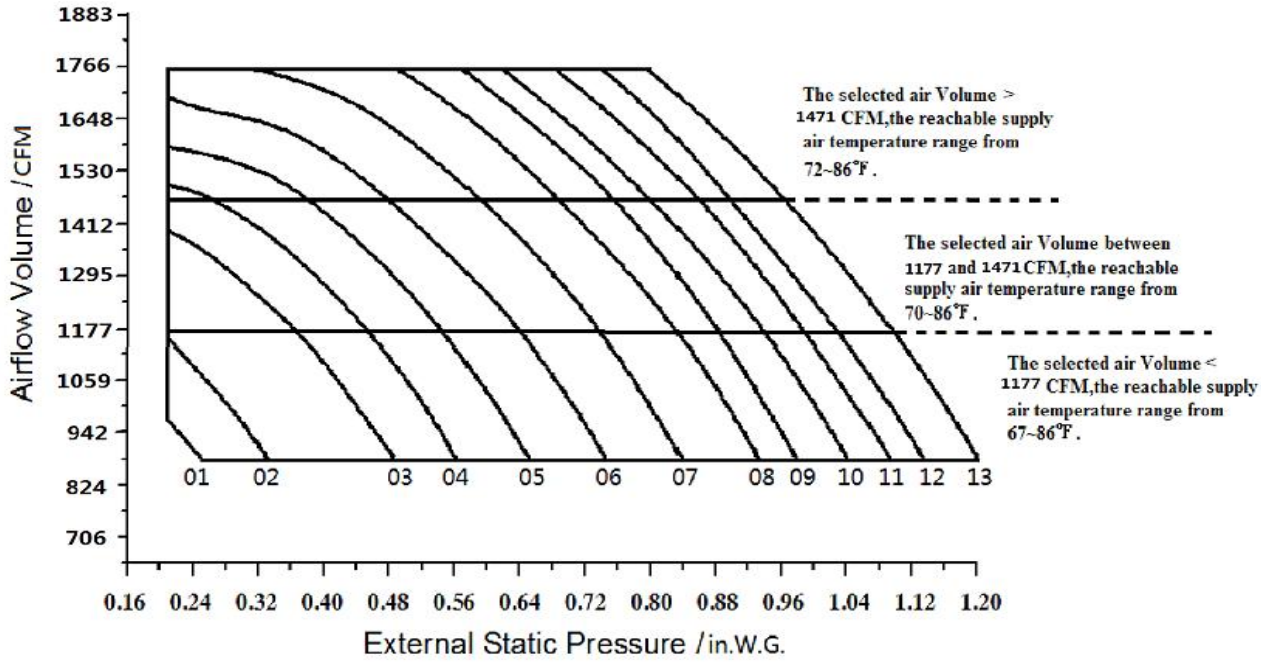

GMV-NDX96P/A-T(U)

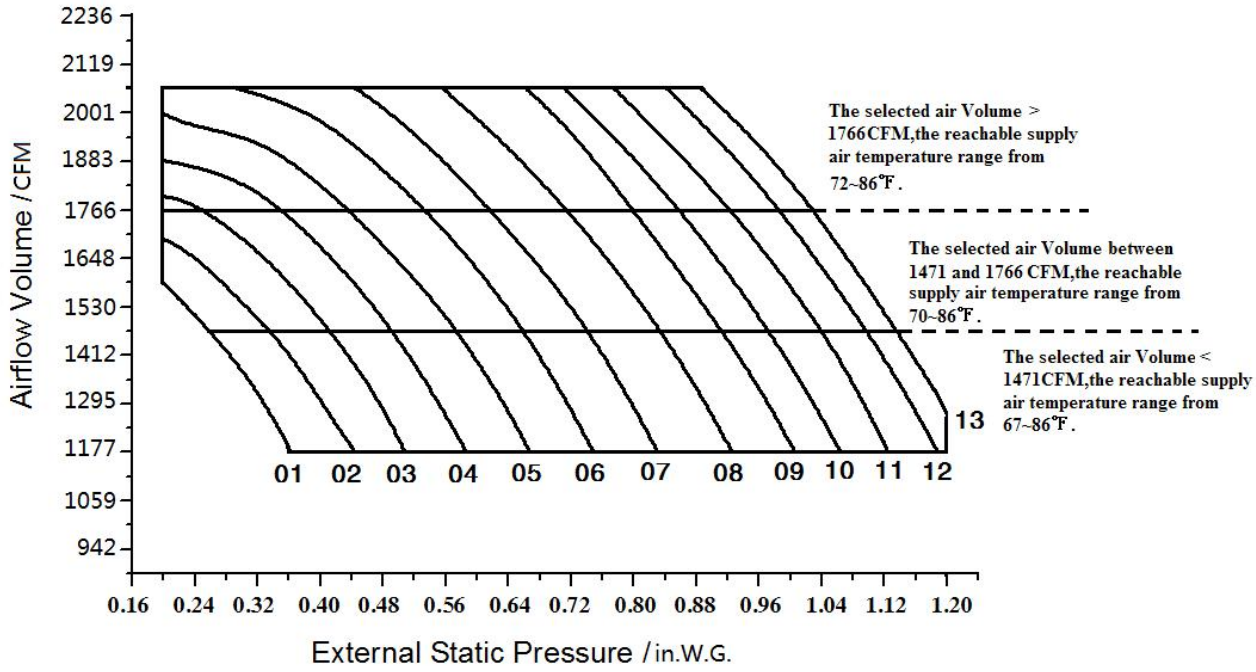

6.5 Air Handler Type Indoor Unit

GMV-ND**A/A-T(U)

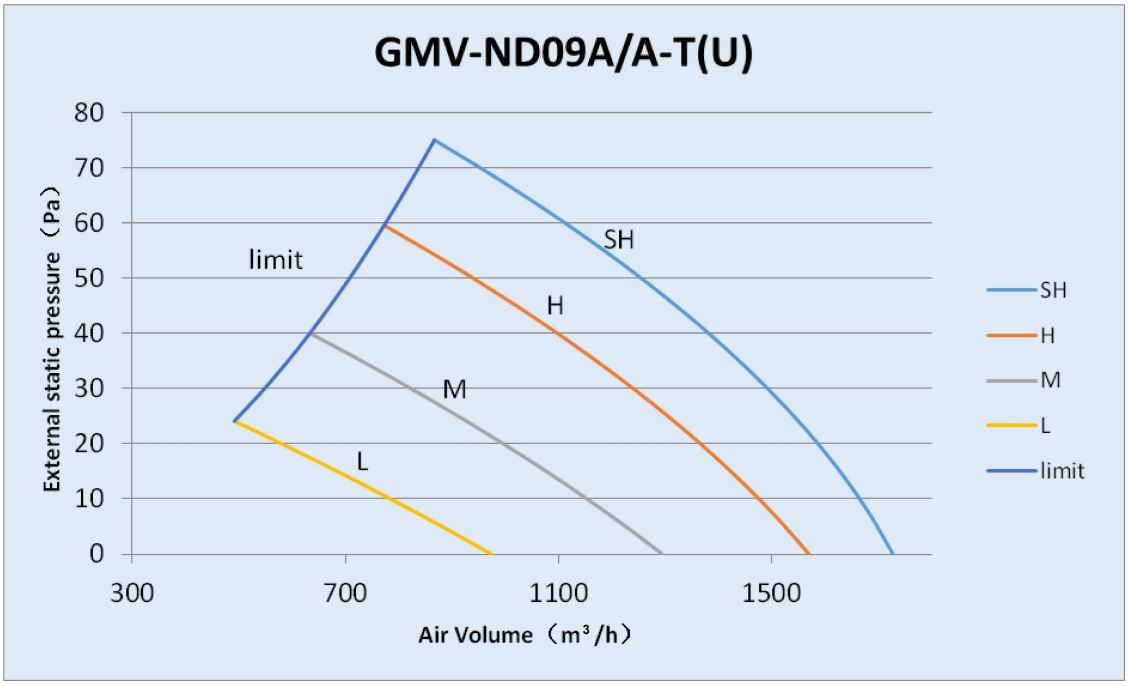

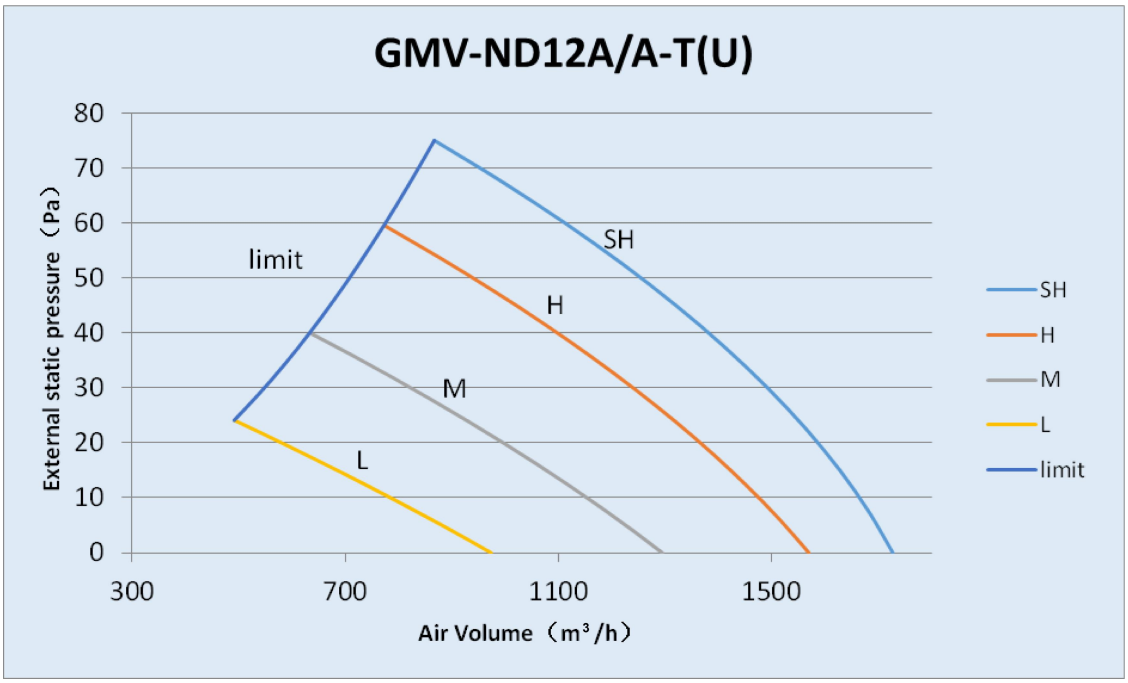

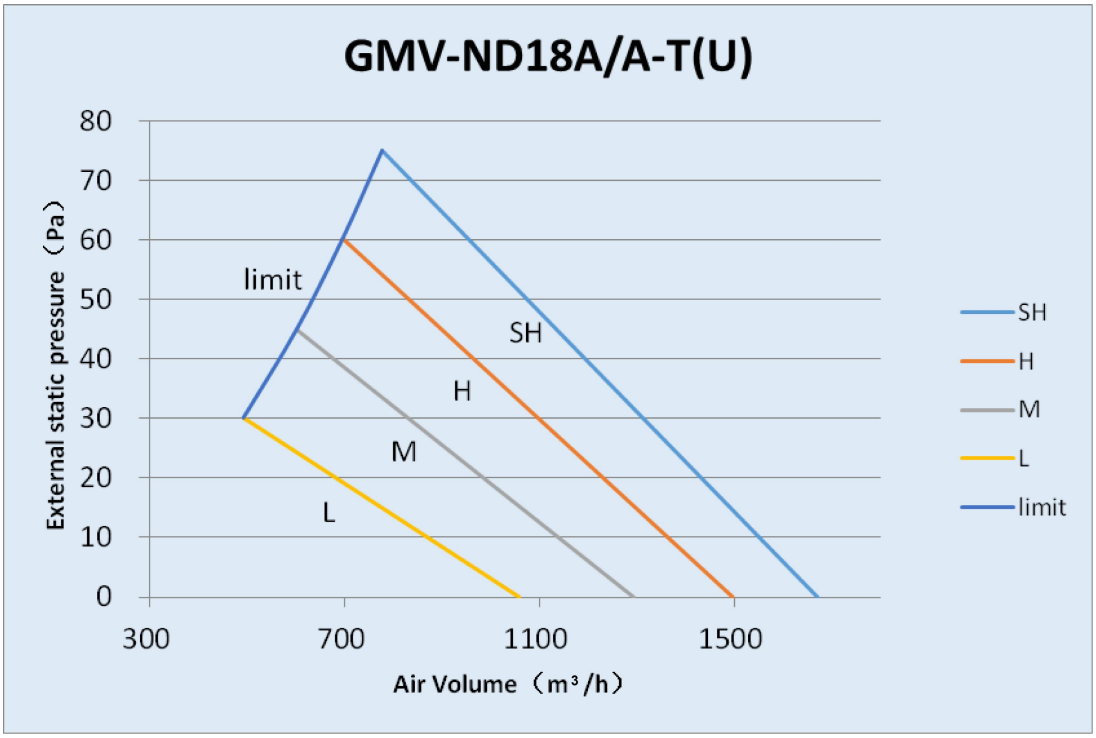
GMV-ND18A/A-T(U)
External static pressure（Pa）
80
70
60
50
40
30
20
10
0
300
700
1100
1500
Air Volume（m³/h）
limit
SH
H
M
L
SH
H
M
L
limit

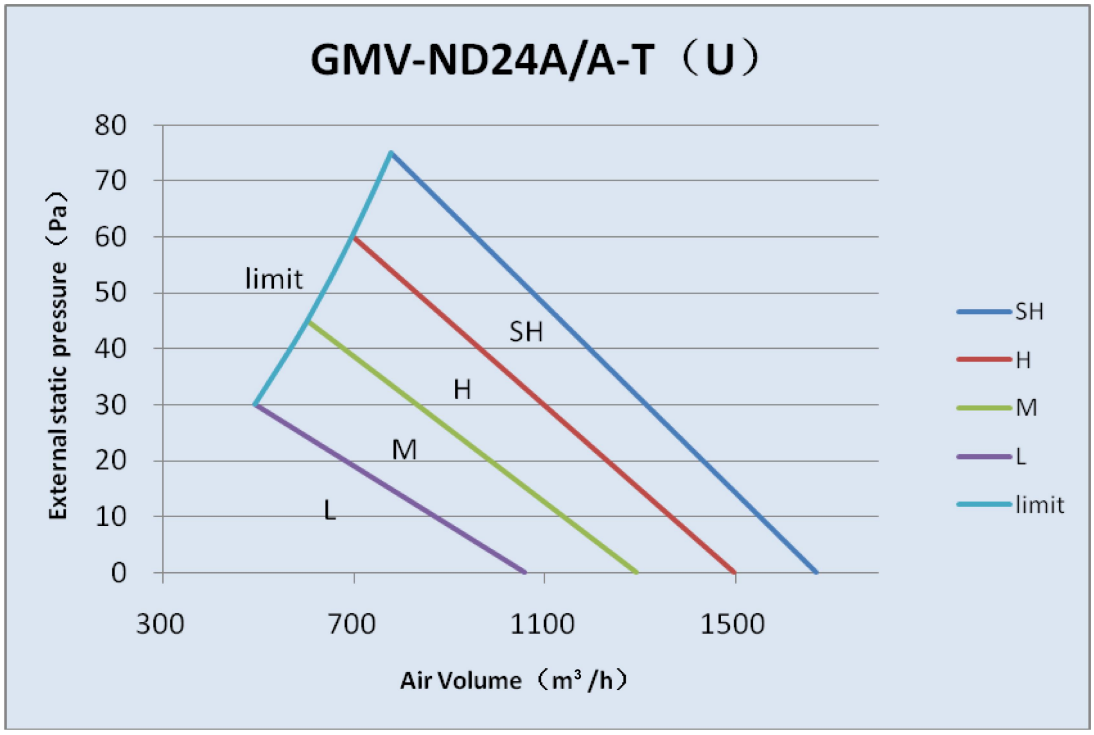
GMV-ND24A/A-T（U）
External static pressure（Pa）
80
70
60
50
40
30
20
10
0
300
700
1100
1500
Air Volume（m³/h）
limit
SH
H
M
L
SH
H
M
L
limit

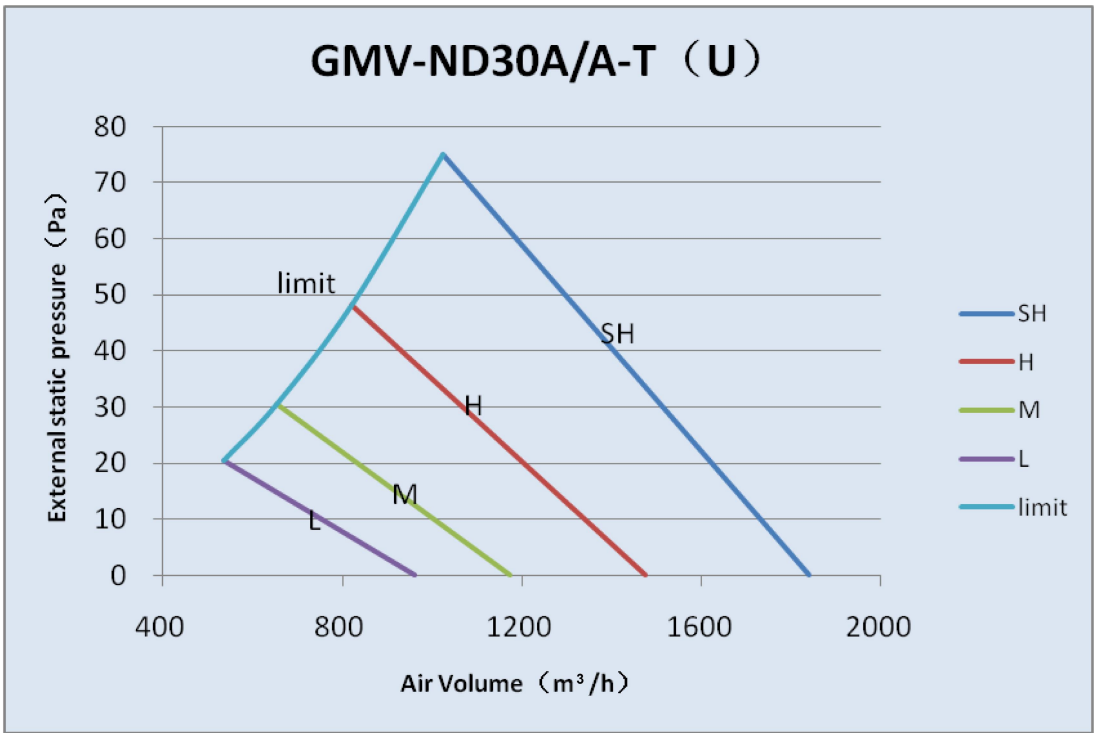
GMV-ND30A/A-T（U）
External static pressure（Pa）
80
70
60
50
40
30
20
10
0
400
800
1200
1600
2000
Air Volume（m³/h）
limit
SH
H
M
L
SH
H
M
L
limit

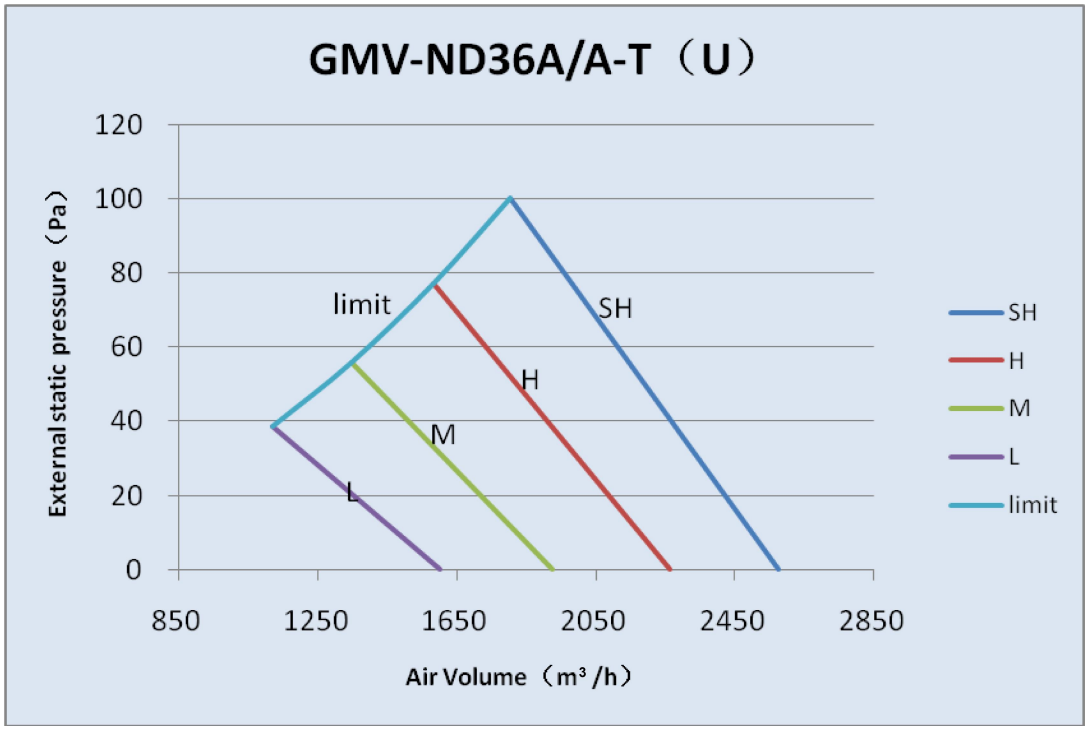
GMV-ND36A/A-T（U）
External static pressure（Pa）
120
100
80
60
40
20
0
850
1250
1650
2050
2450
2850
Air Volume（m³/h）
limit
SH
H
M
L
SH
H
M
L
limit

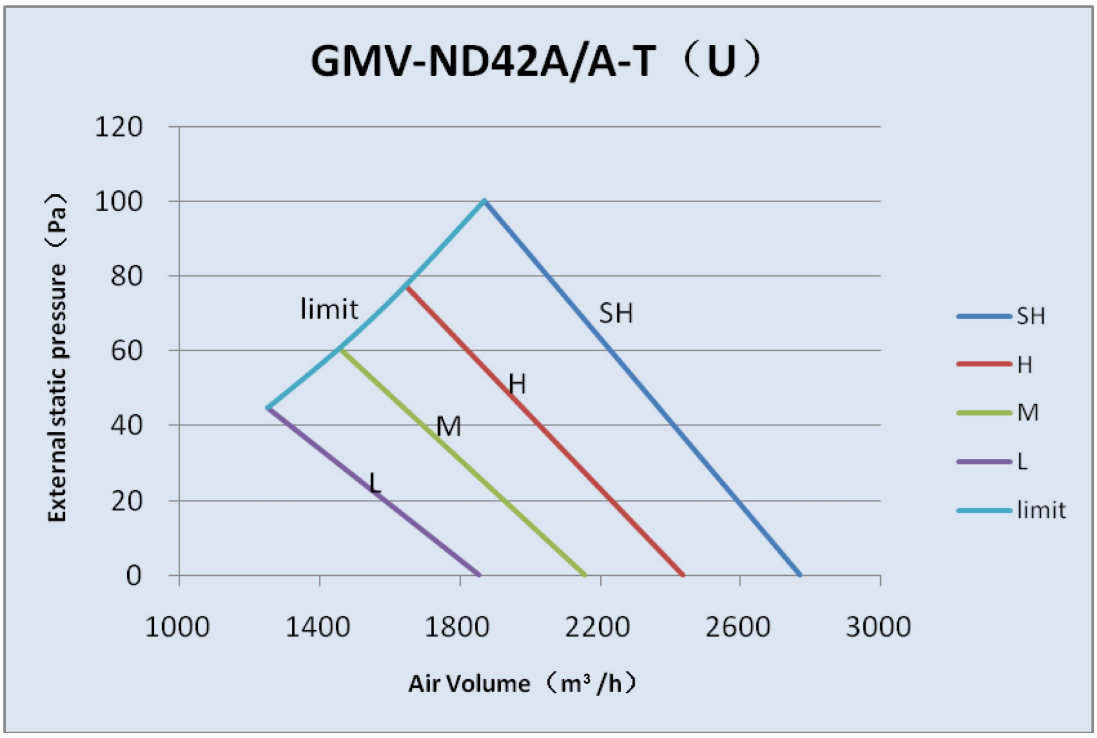
GMV-ND42A/A-T（U）
External static pressure（Pa）
120
100
80
60
40
20
0
1000
1400
1800
2200
2600
3000
Air Volume（m³/h）
limit
SH
H
M
L
SH
H
M
L
limit

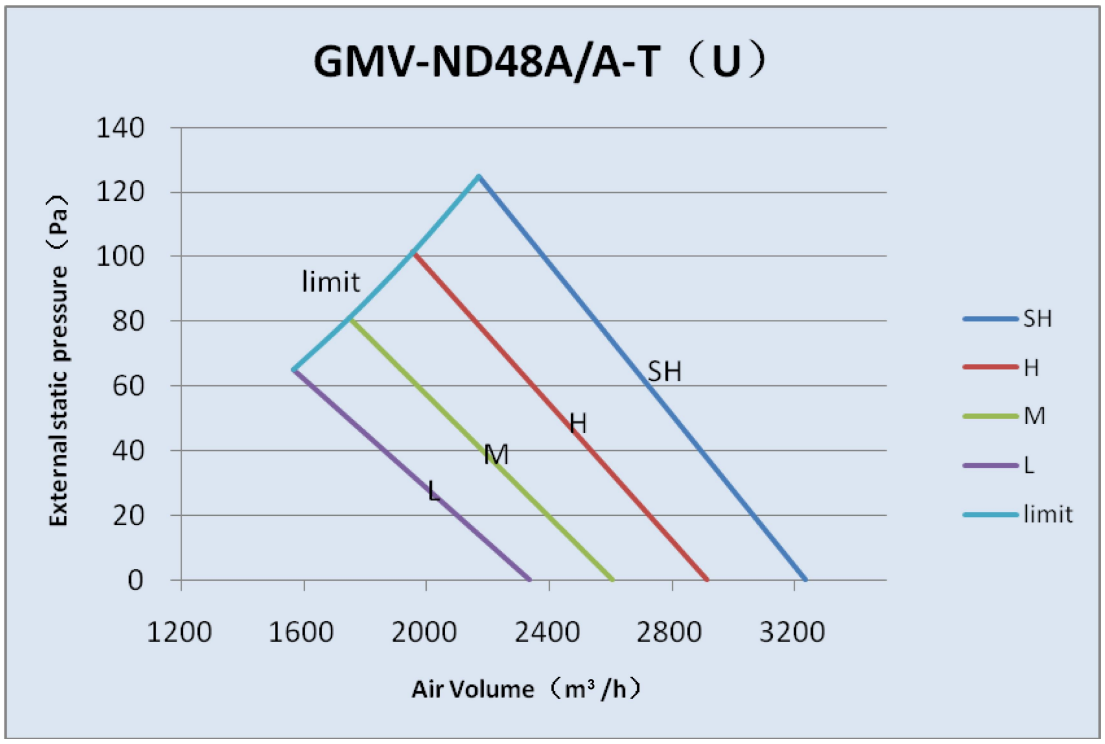
GMV-ND48A/A-T（U）
External static pressure（Pa）
140
120
100
80
60
40
20
0
1200
1600
2000
2400
2800
3200
Air Volume（m³/h）
limit
SH
H
M
L
SH
H
M
L
limit

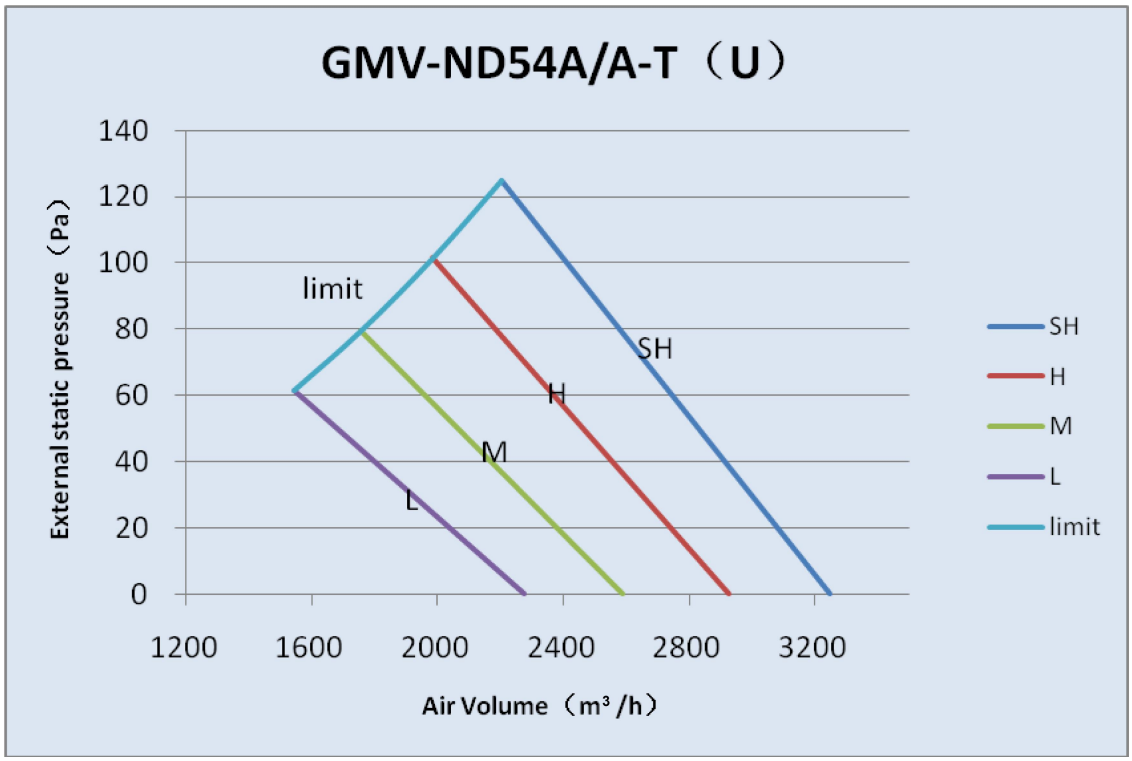
GMV-ND54A/A-T（U）
External static pressure（Pa）
140
120
100
80
60
40
20
0
1200
1600
2000
2400
2800
3200
Air Volume（m³/h）
limit
SH
H
M
L
SH
H
M
L
limit

GMV-ND**A/B-T(U)

GMV-ND09A/B-T(U)

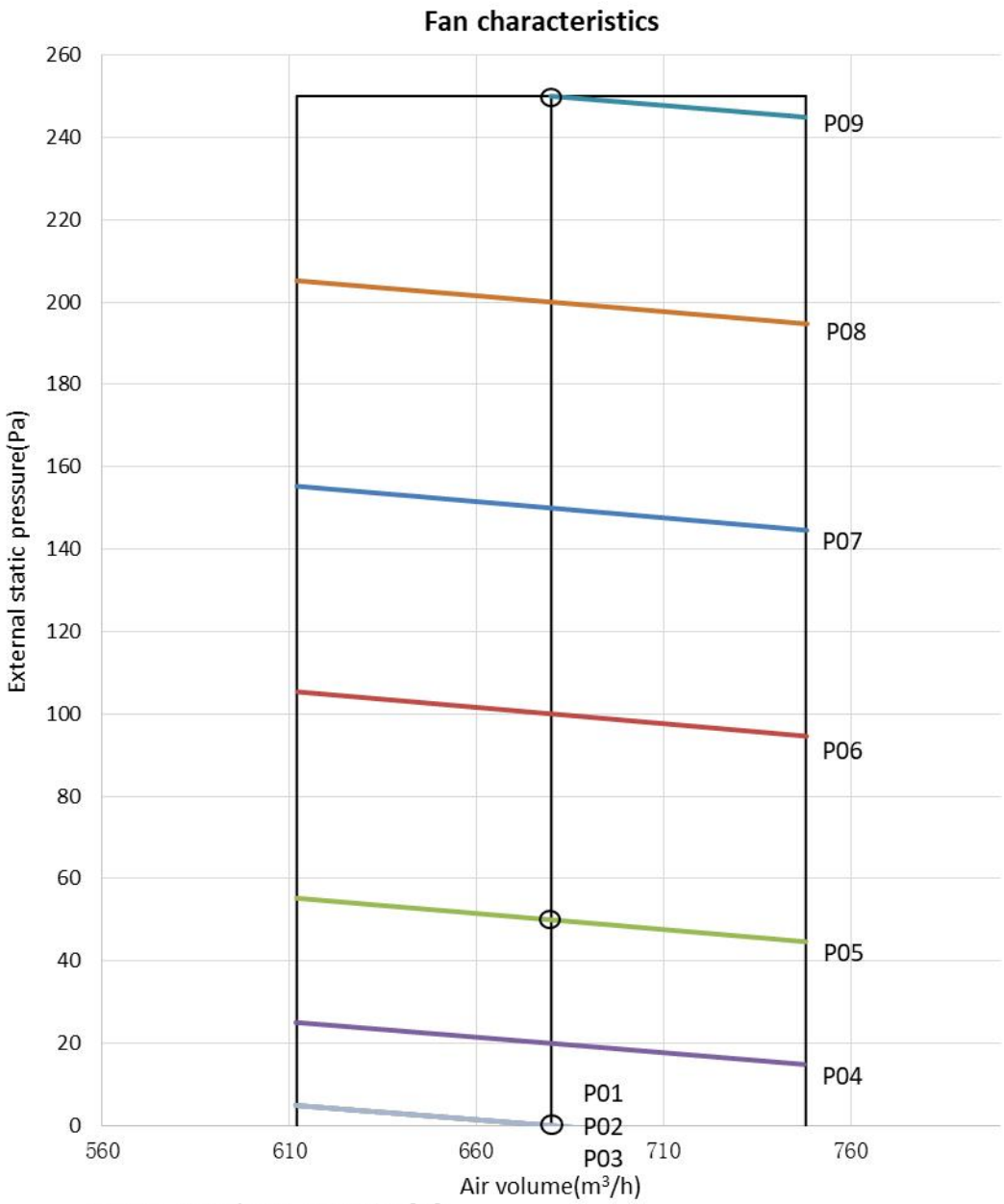

NOTE: Air volume range in [H].

GMV-ND12A/B-T(U)

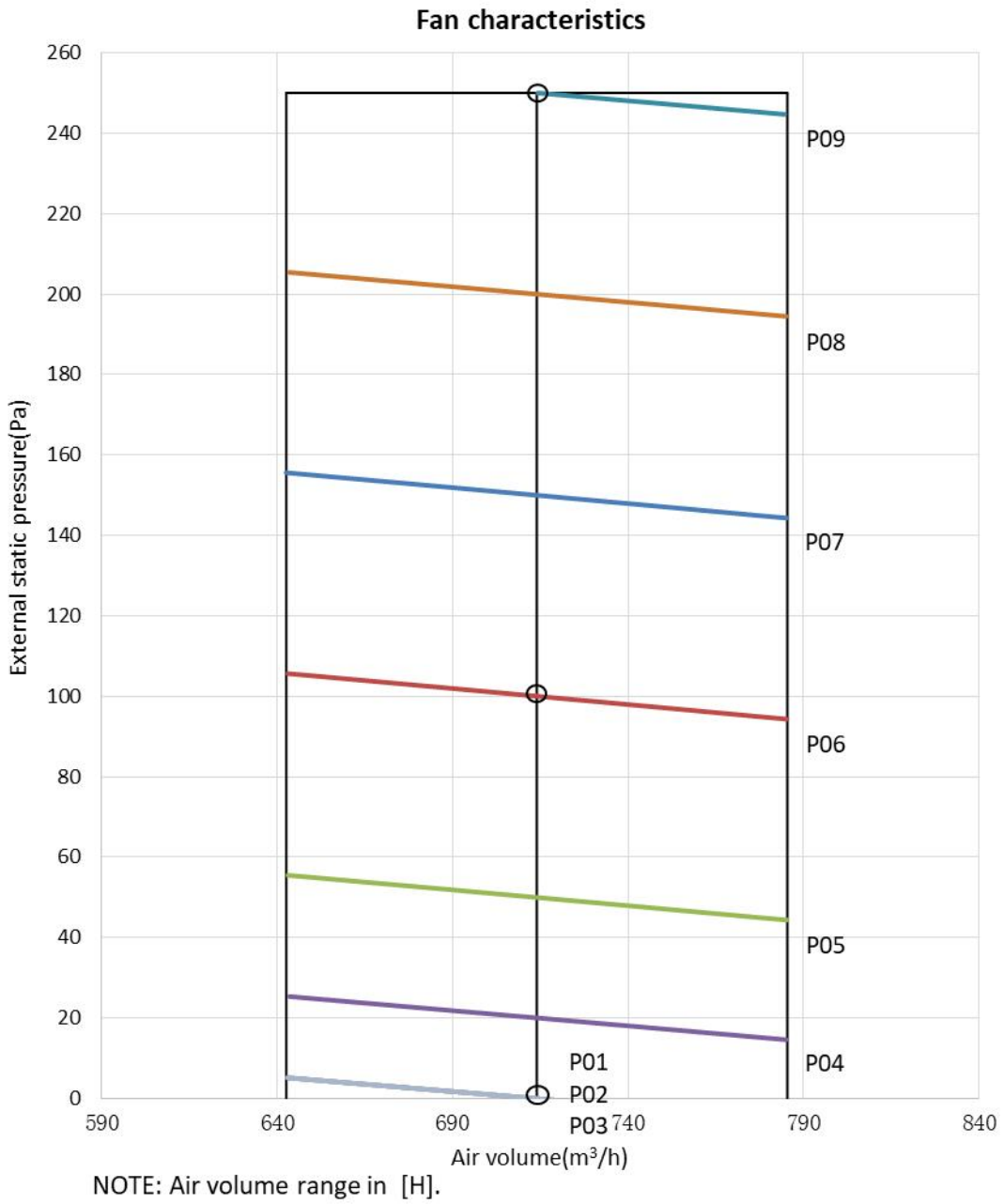

NOTE: Air volume range in [H].

GMV-ND18A/B-T(U)

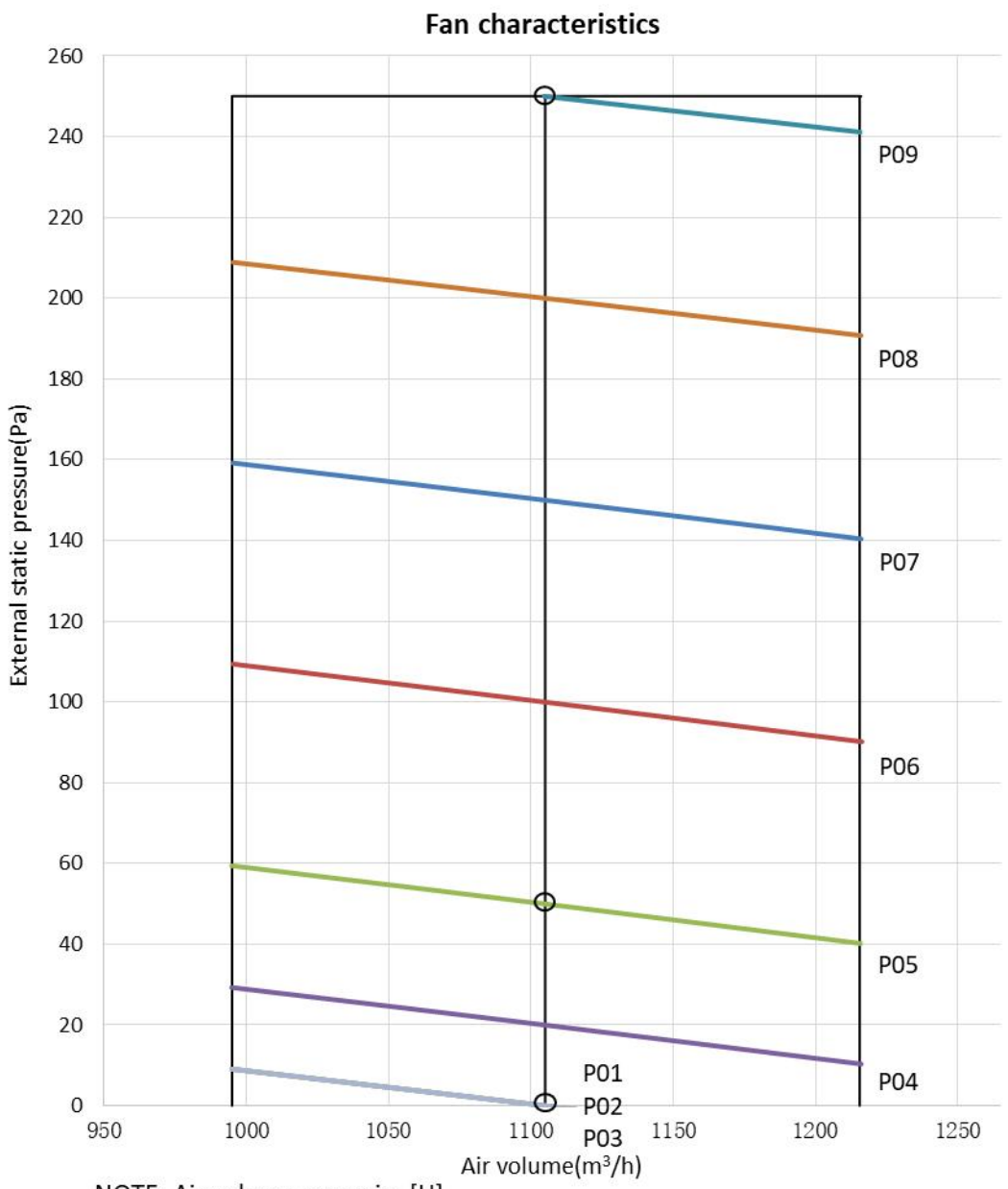

NOTE: Air volume range in [H].

GMV-ND24A/B-T(U)

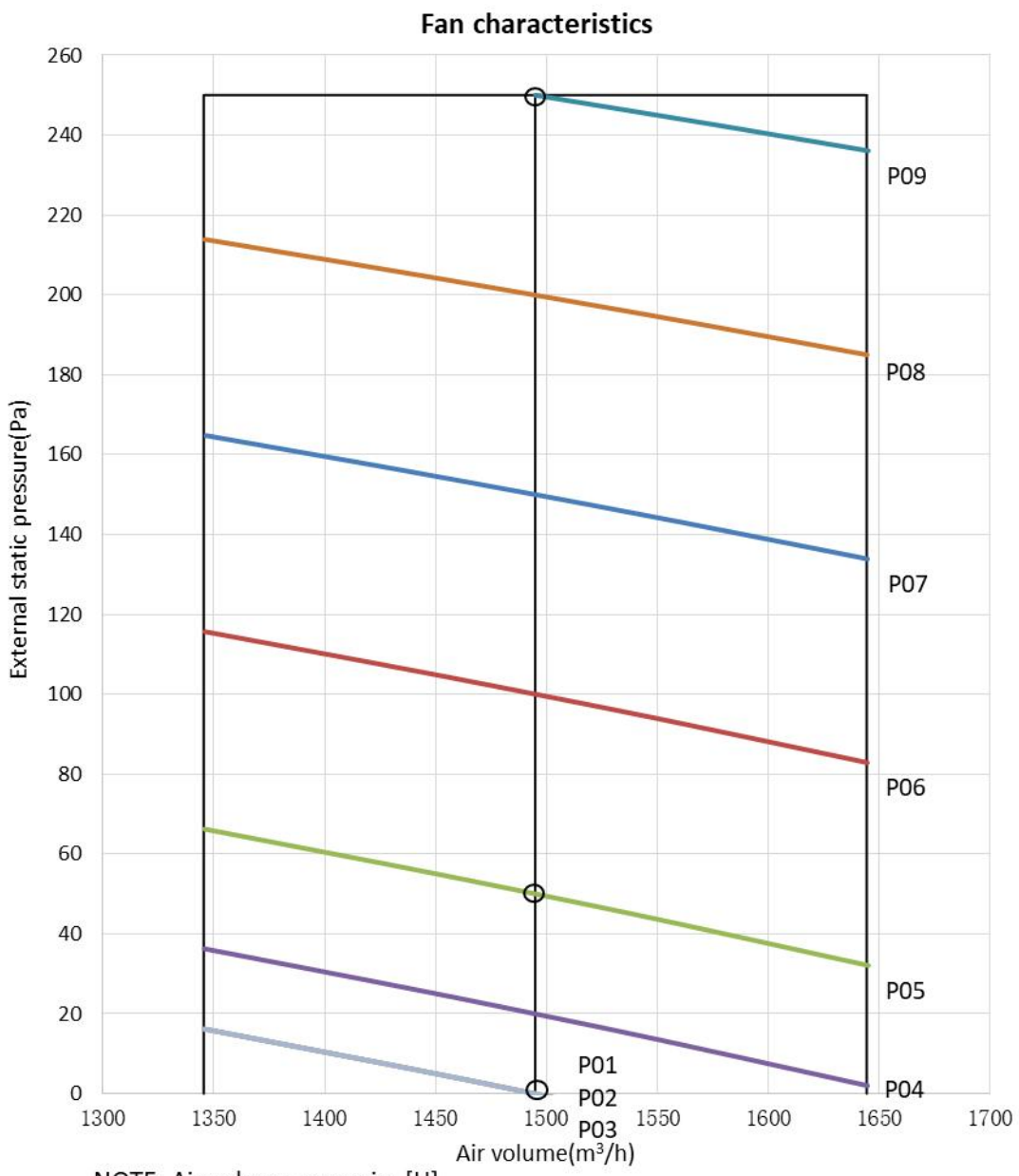

NOTE: Air volume range in [H].

GMV-ND30A/B-T(U)

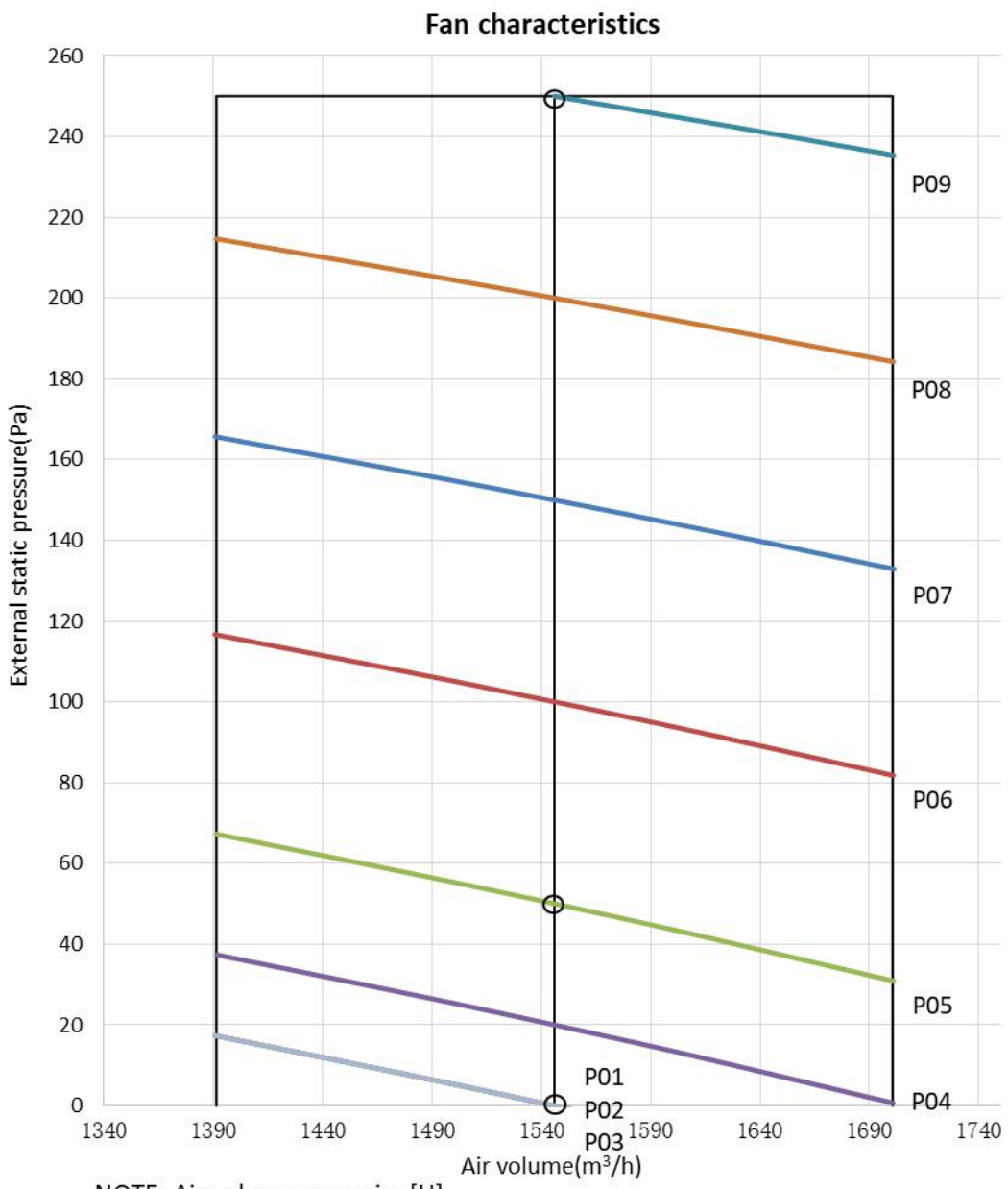

NOTE: Air volume range in [H].

GMV-ND36A/B-T(U)

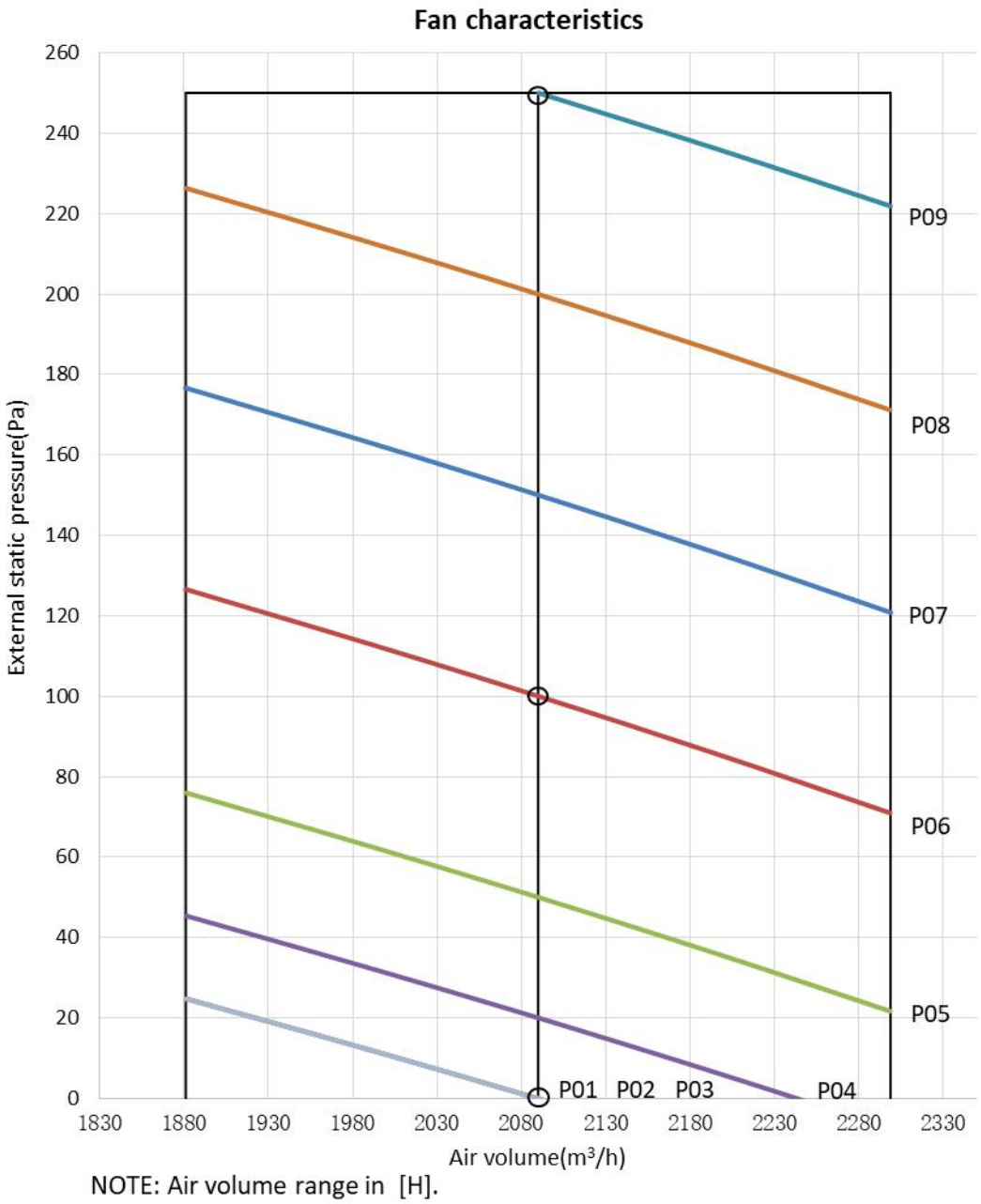

GMV-ND42A/B-T(U)

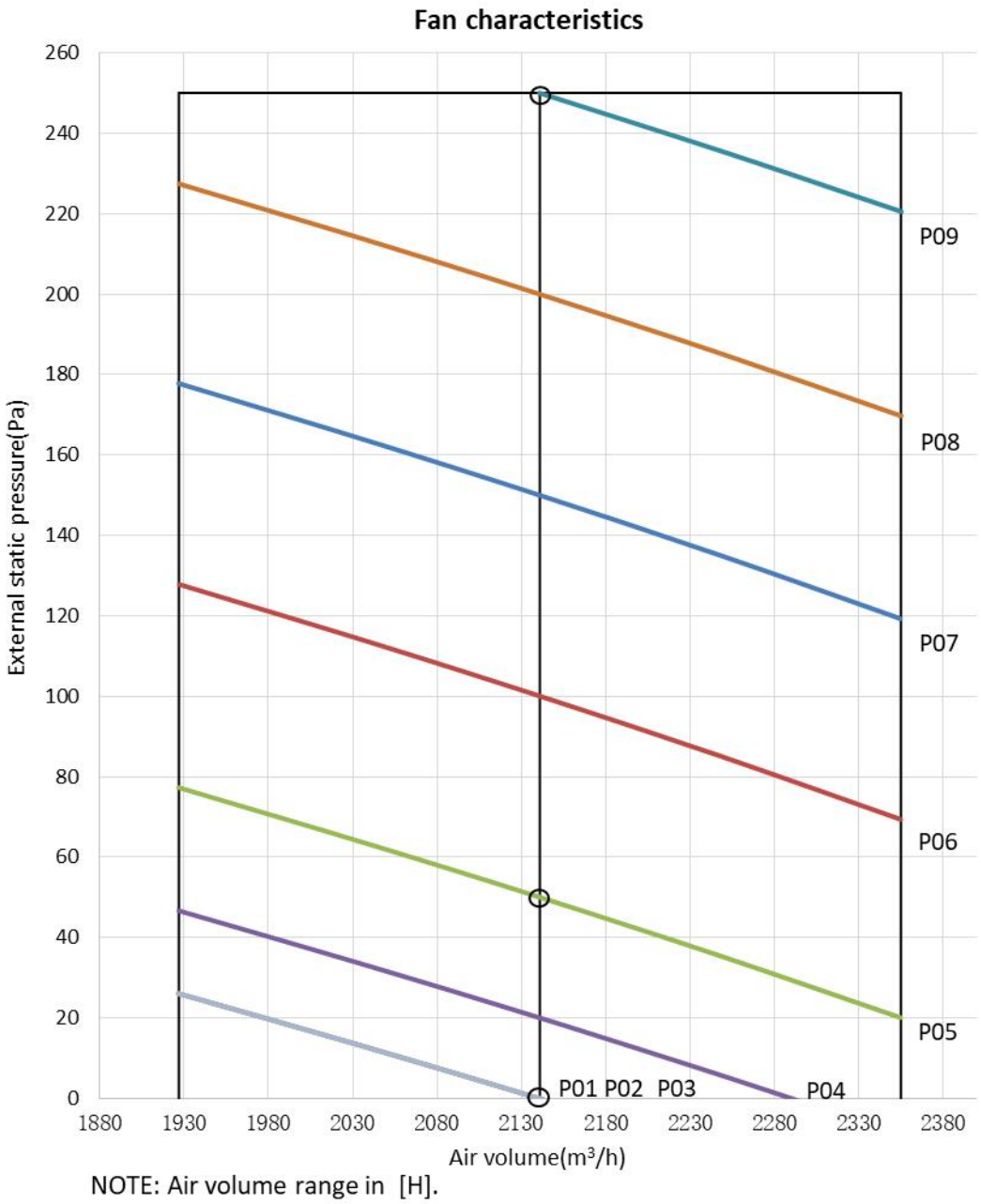

GMV-ND48A/B-T(U)

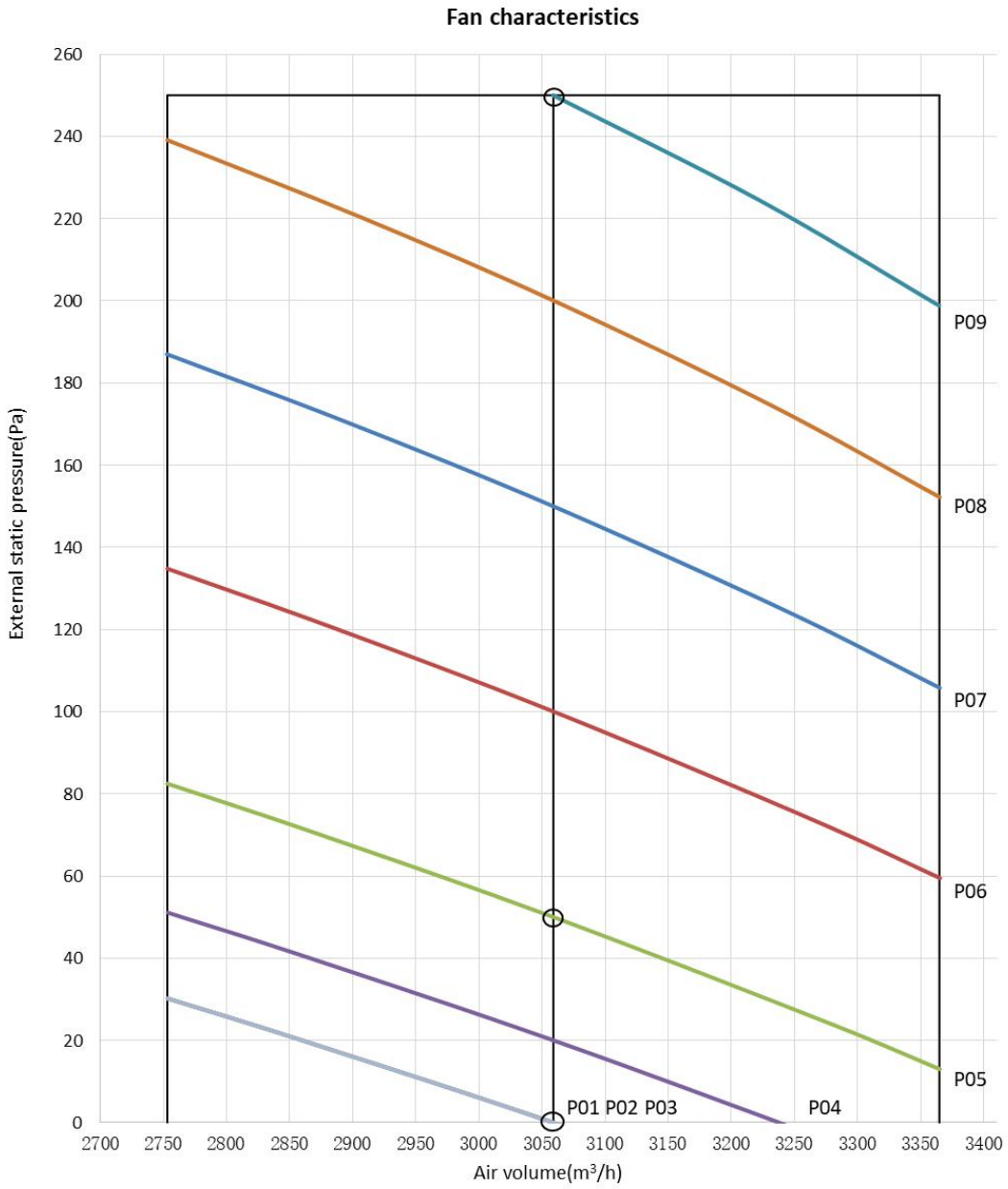

NOTE: Air volume range in [H].

GMV-ND54A/B-T(U)

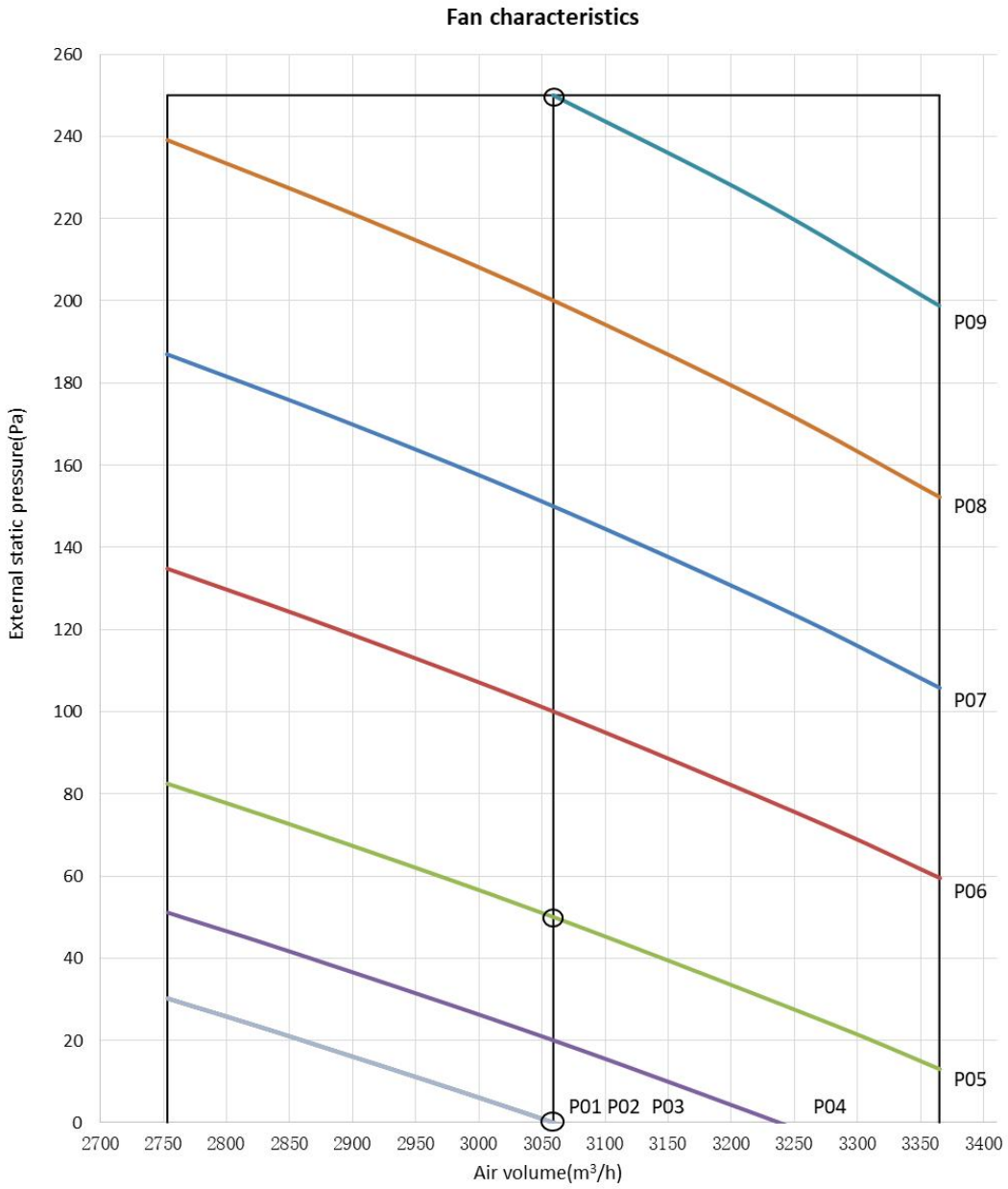

NOTE: Air volume range in [H].

GMV-ND60A/B-T(U)

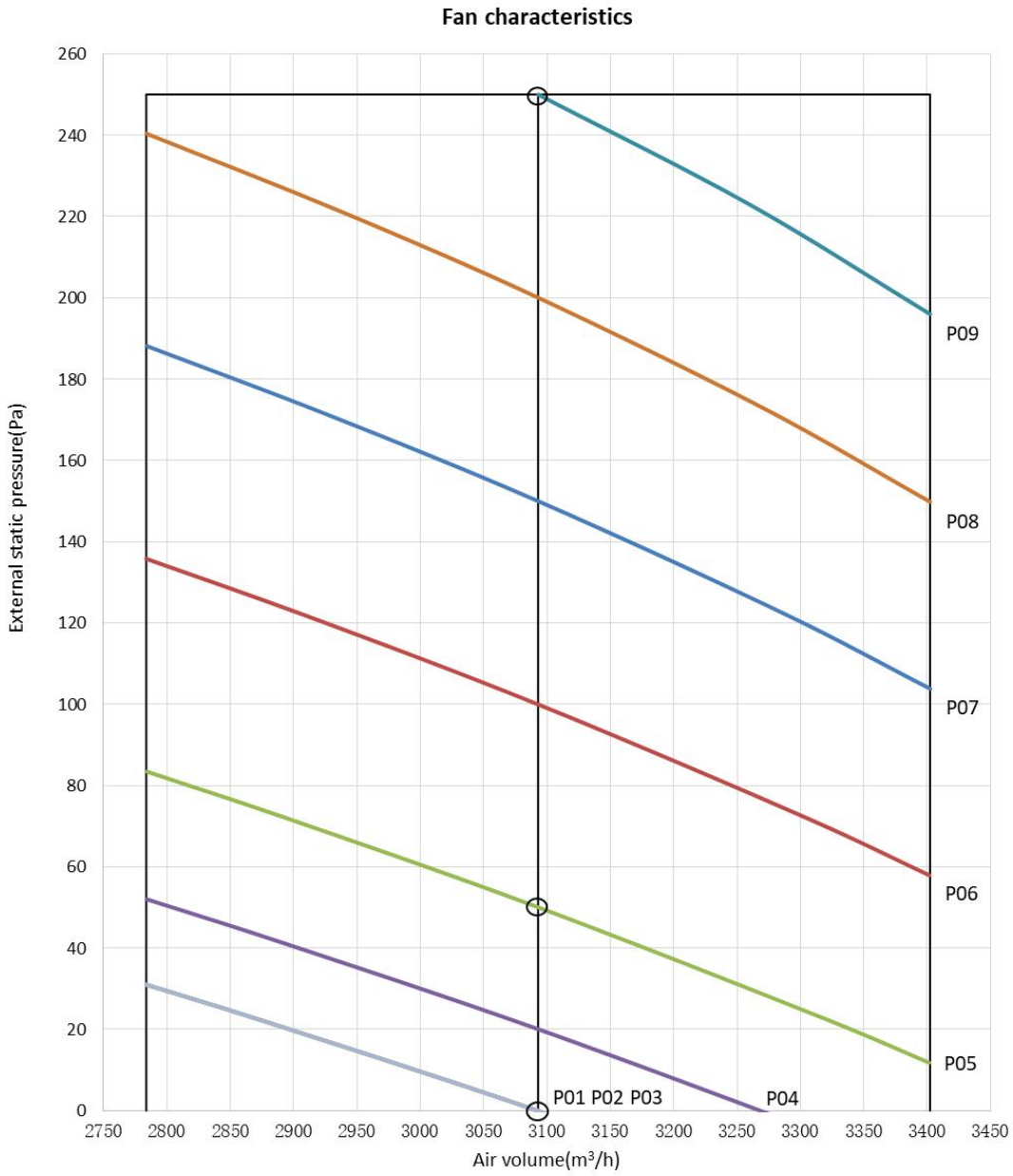

NOTE: Air volume range in [H].

6.6 General ESP Duct Type

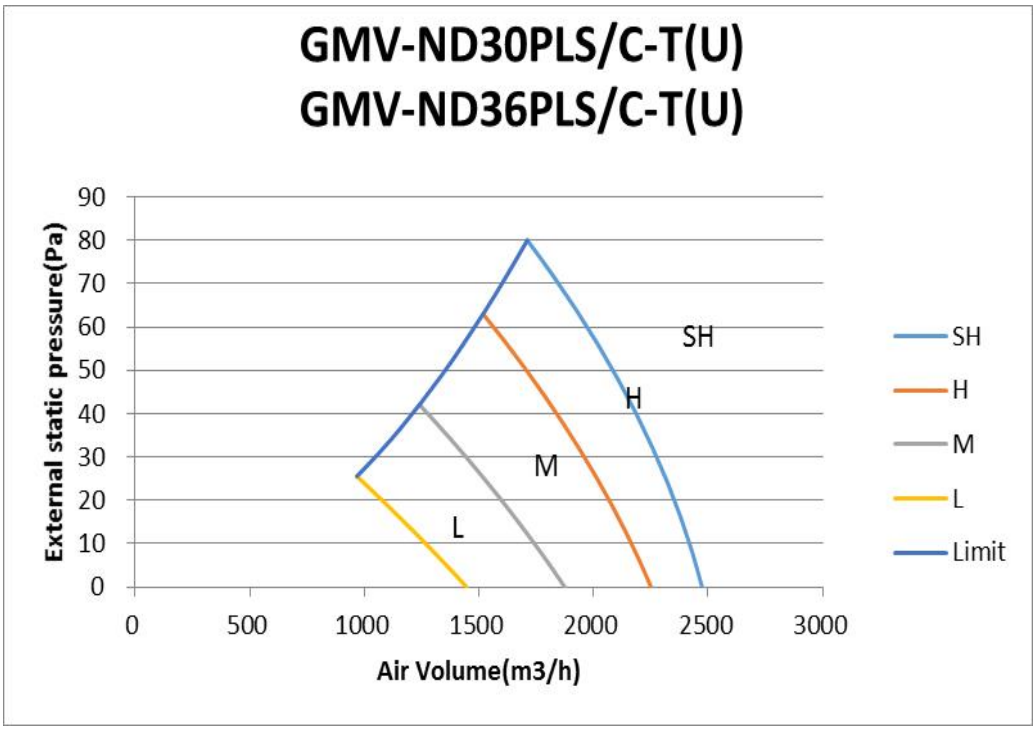

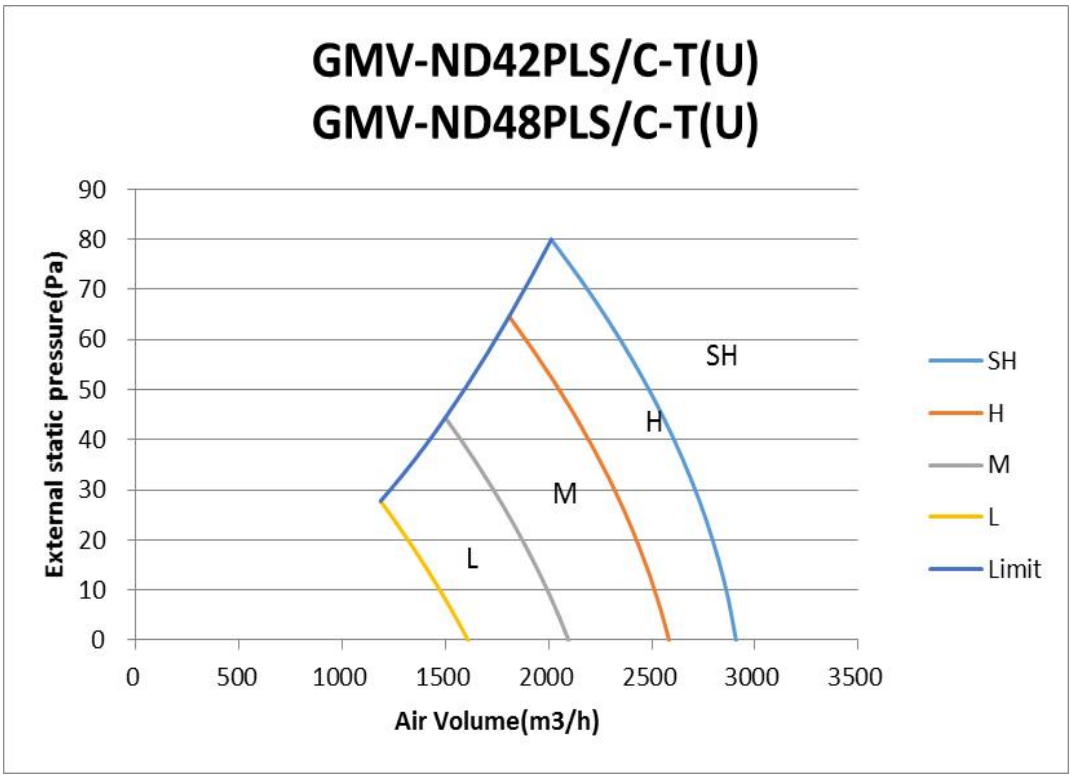

6.7 Super High ESP Duct Type

GMV-ND**PHS/B-T(U)

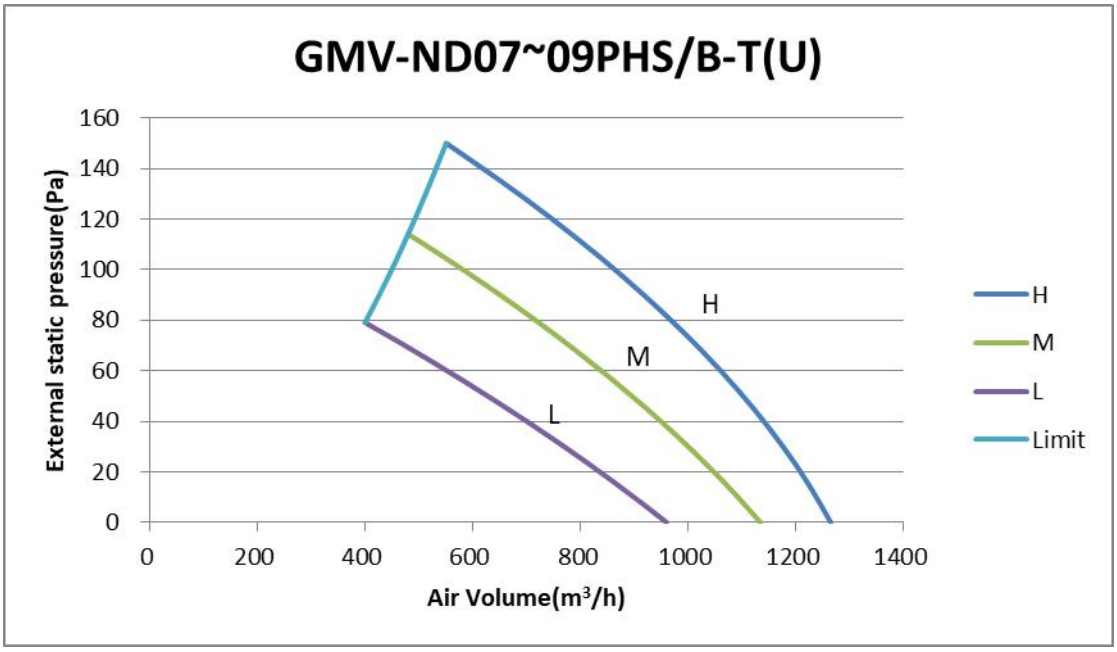

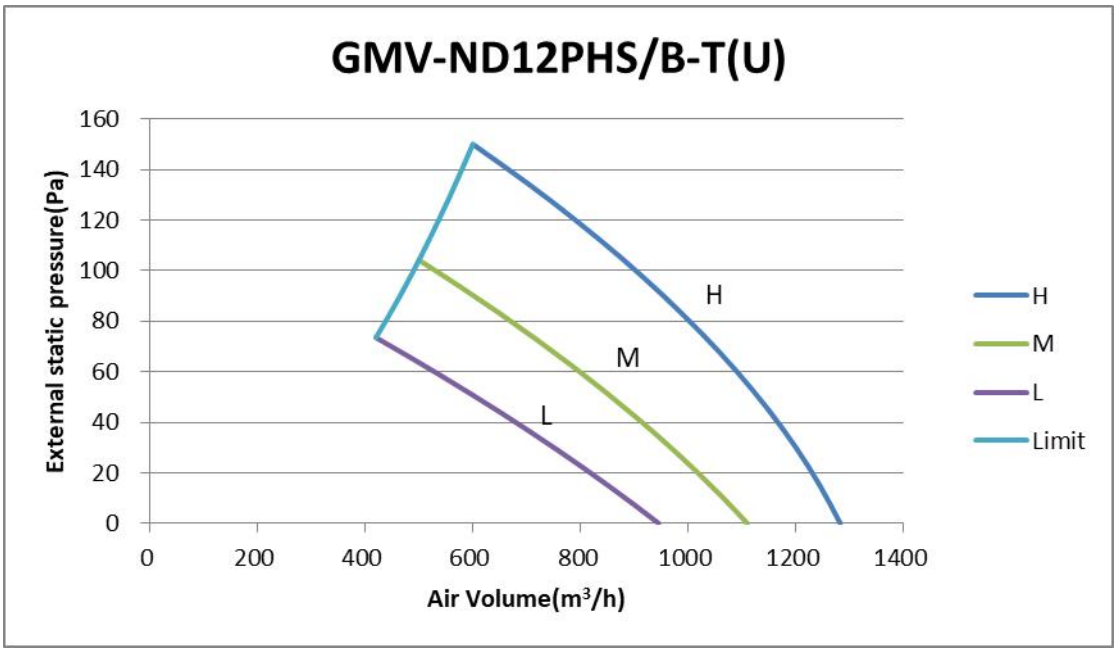

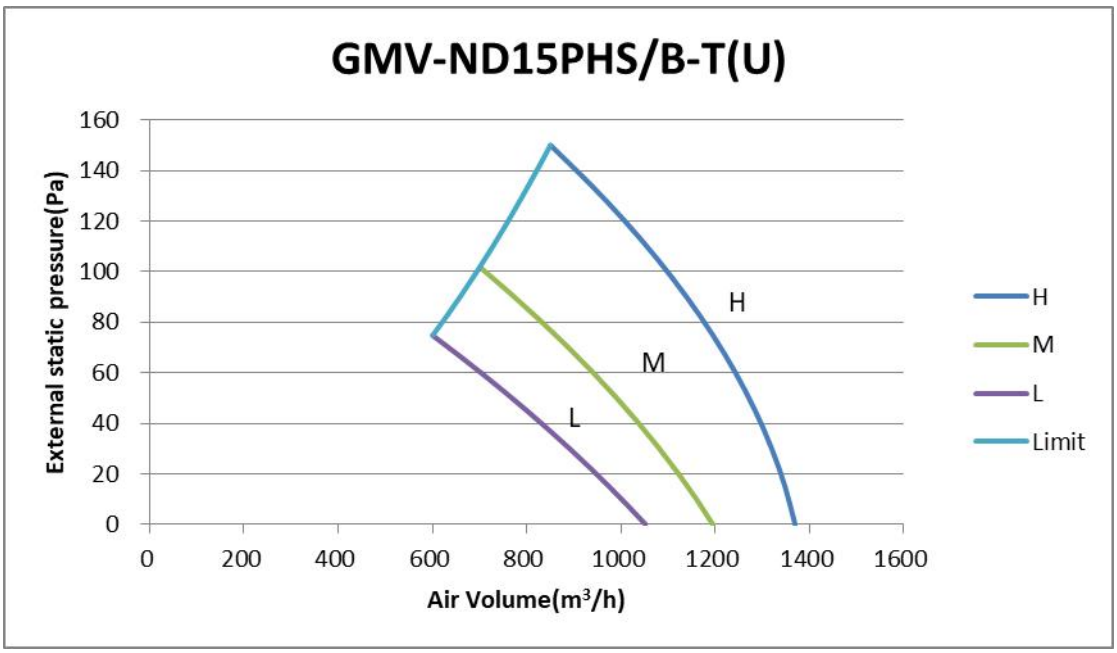
GMV-ND15PHS/B-T(U)
External static pressure(Pa)
160
140
120
100
80
60
40
20
0
0
200
400
600
800
1000
1200
1400
1600
Air Volume(m³/h)
H
M
L
H
M
L
Limit

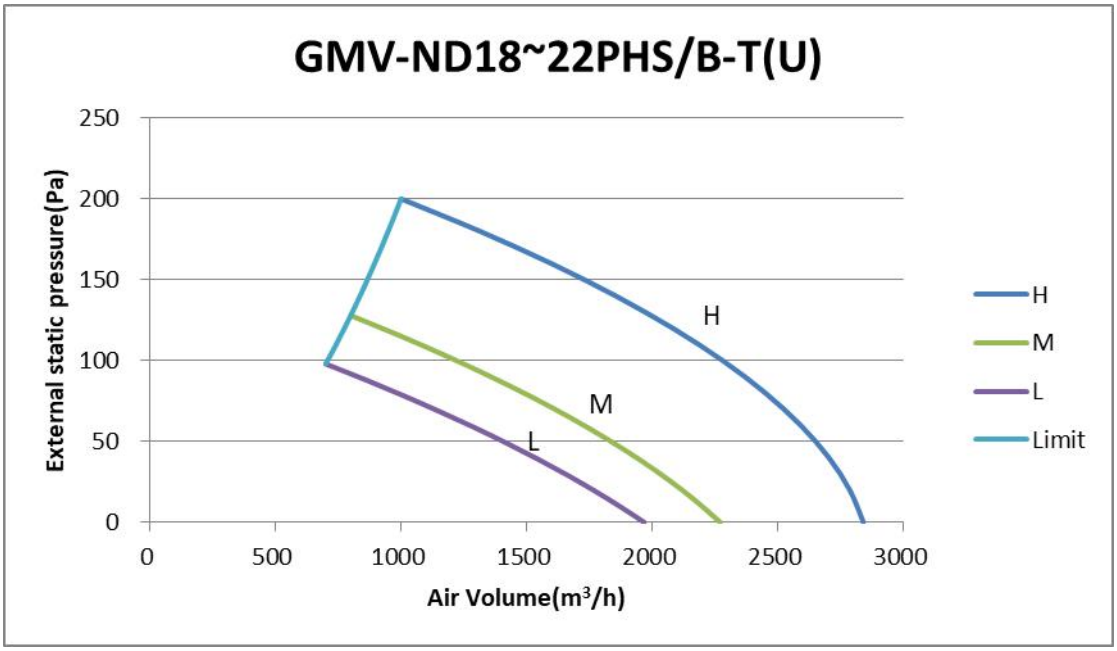
GMV-ND18~22PHS/B-T(U)
External static pressure(Pa)
250
200
150
100
50
0
0
500
1000
1500
2000
2500
3000
Air Volume(m³/h)
H
M
L
H
M
L
Limit

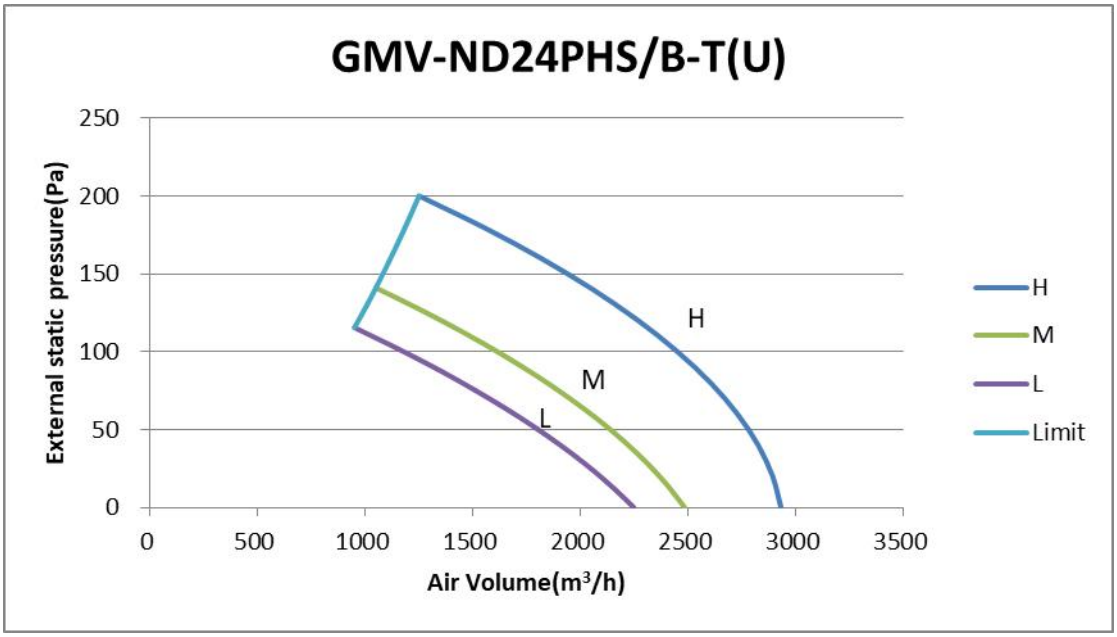
GMV-ND24PHS/B-T(U)
External static pressure(Pa)
250
200
150
100
50
0
0
500
1000
1500
2000
2500
3000
3500
Air Volume(m³/h)
H
M
L
H
M
L
Limit

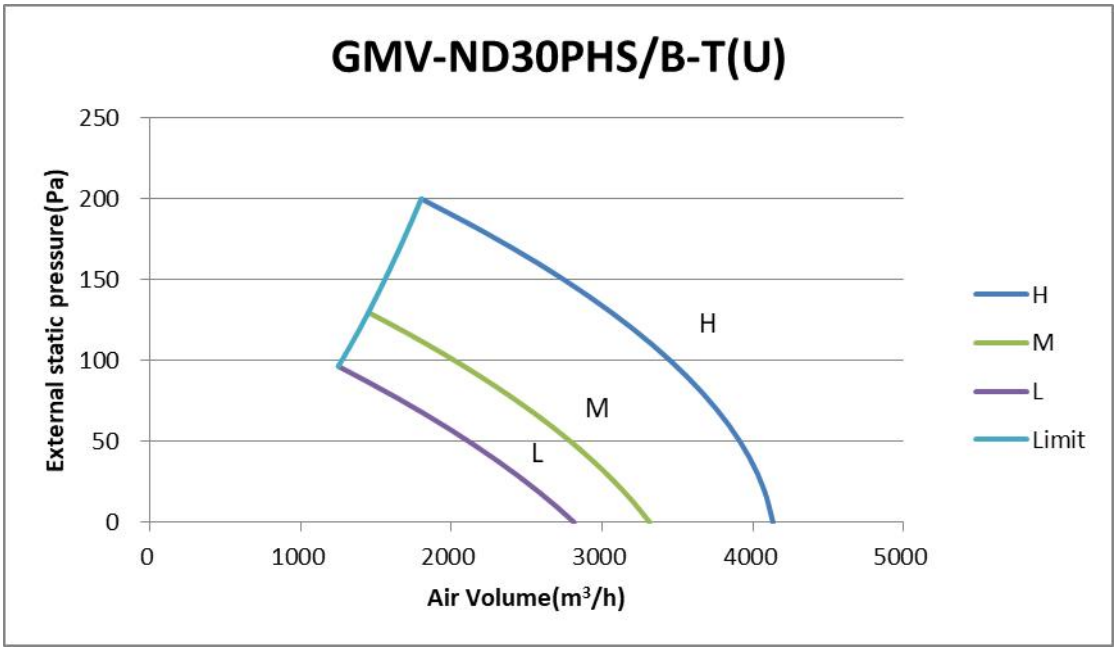
GMV-ND30PHS/B-T(U)
External static pressure(Pa)
250
200
150
100
50
0
0
1000
2000
3000
4000
5000
Air Volume(m³/h)
H
M
L
H
M
L
Limit

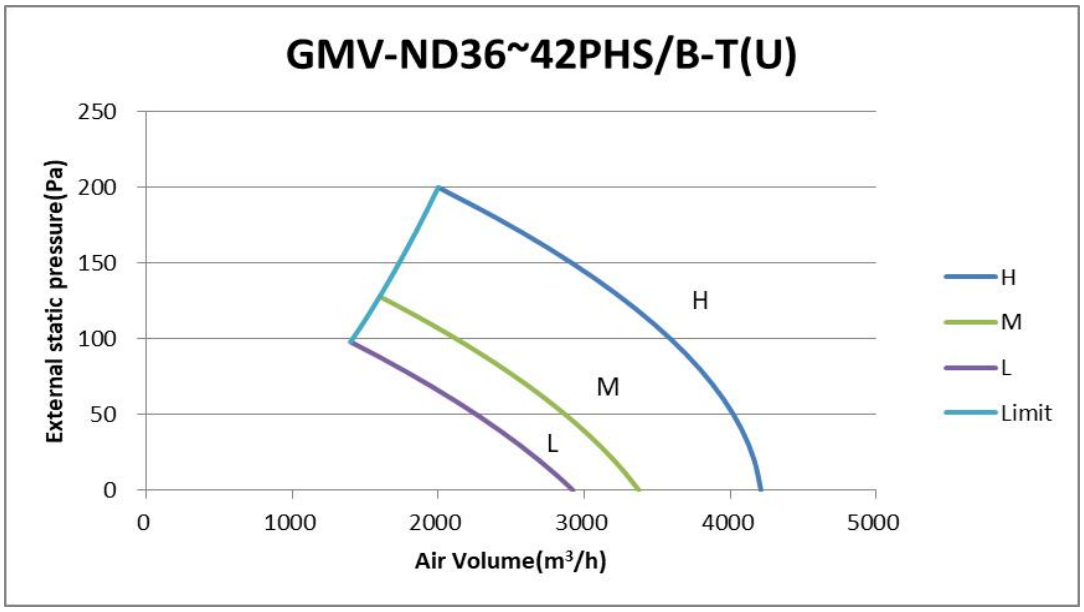
GMV-ND36~42PHS/B-T(U)
External static pressure(Pa)
250
200
150
100
50
0
0
1000
2000
3000
4000
5000
Air Volume(m³/h)
H
M
L
H
M
L
Limit

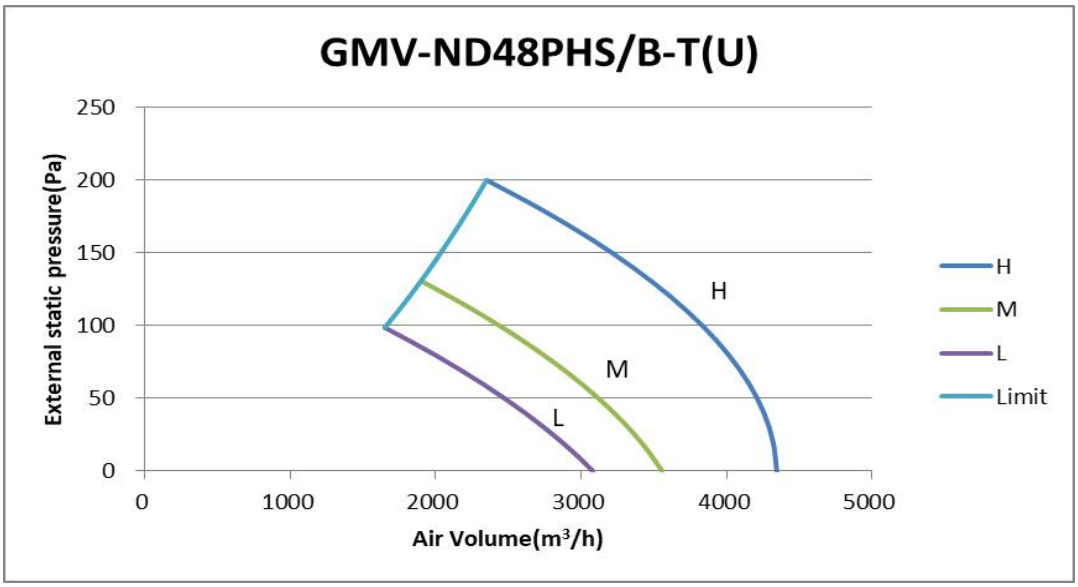
GMV-ND48PHS/B-T(U)
External static pressure(Pa)
250
200
150
100
50
0
0
1000
2000
3000
4000
5000
Air Volume(m³/h)
H
M
L
H
M
L
Limit

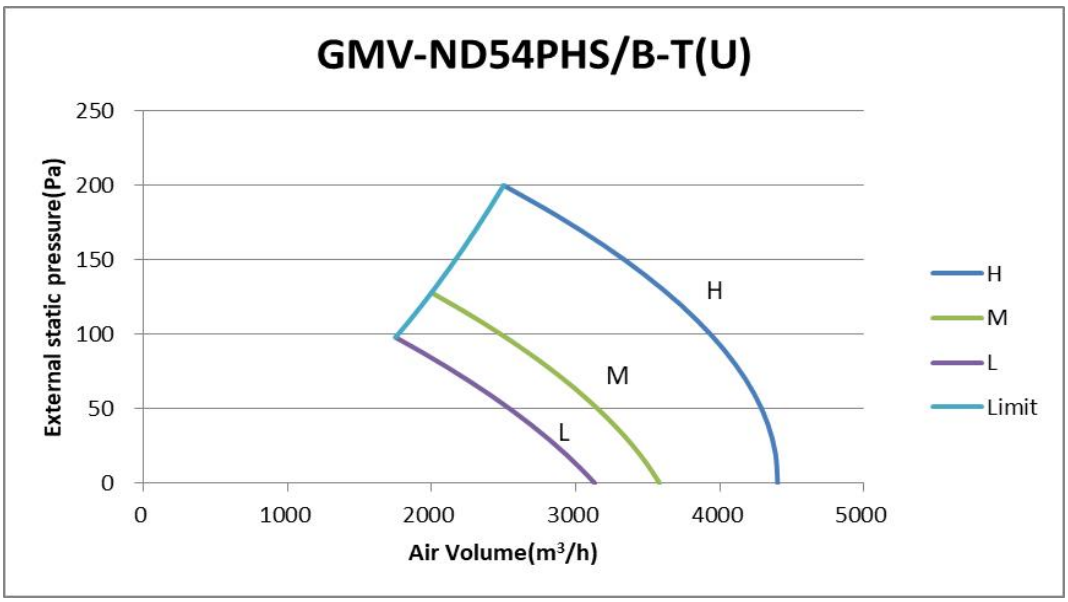
GMV-ND54PHS/B-T(U)
External static pressure(Pa)
250
200
150
100
50
0
0
1000
2000
3000
4000
5000
Air Volume(m³/h)
H
M
L
H
M
L
Limit

GMV-ND**PHS/D-T(U)

GMV-ND07~09PHS/D-T(U)

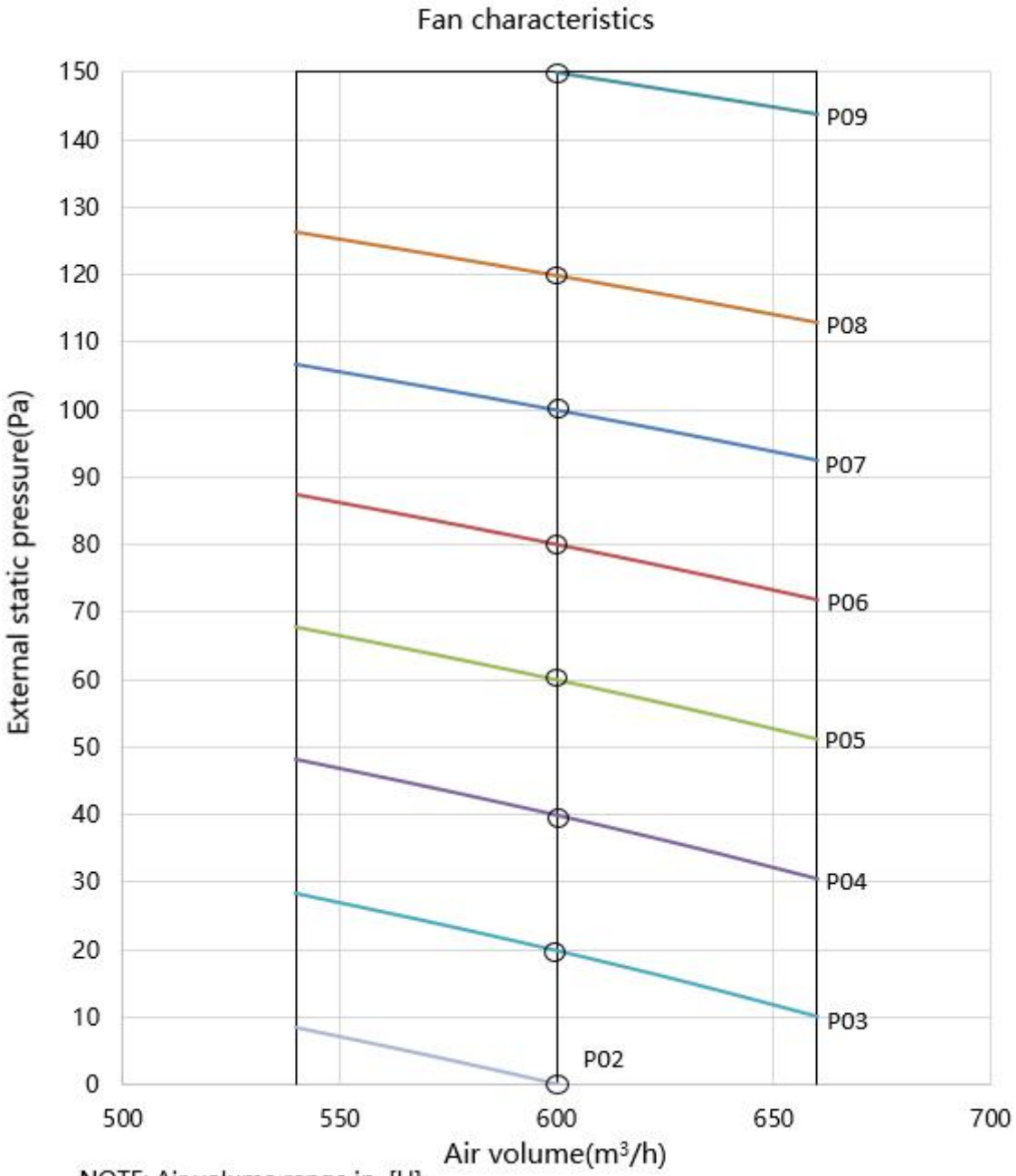

NOTE: Air volume range in [H].

GMV-ND12~18PHS/D-T(U)

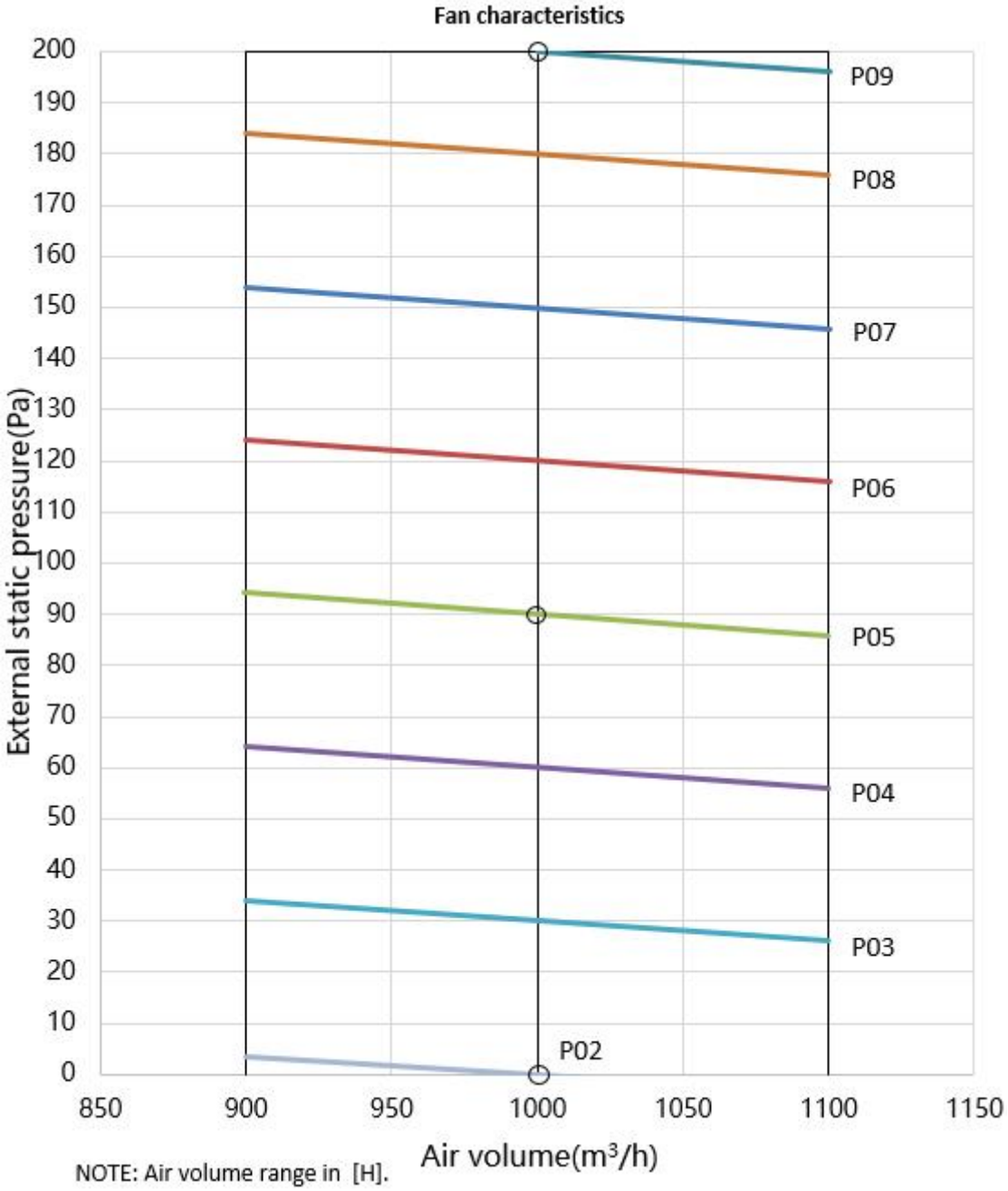

NOTE: Air volume range in [H].

GMV-ND22~24PHS/D-T(U)

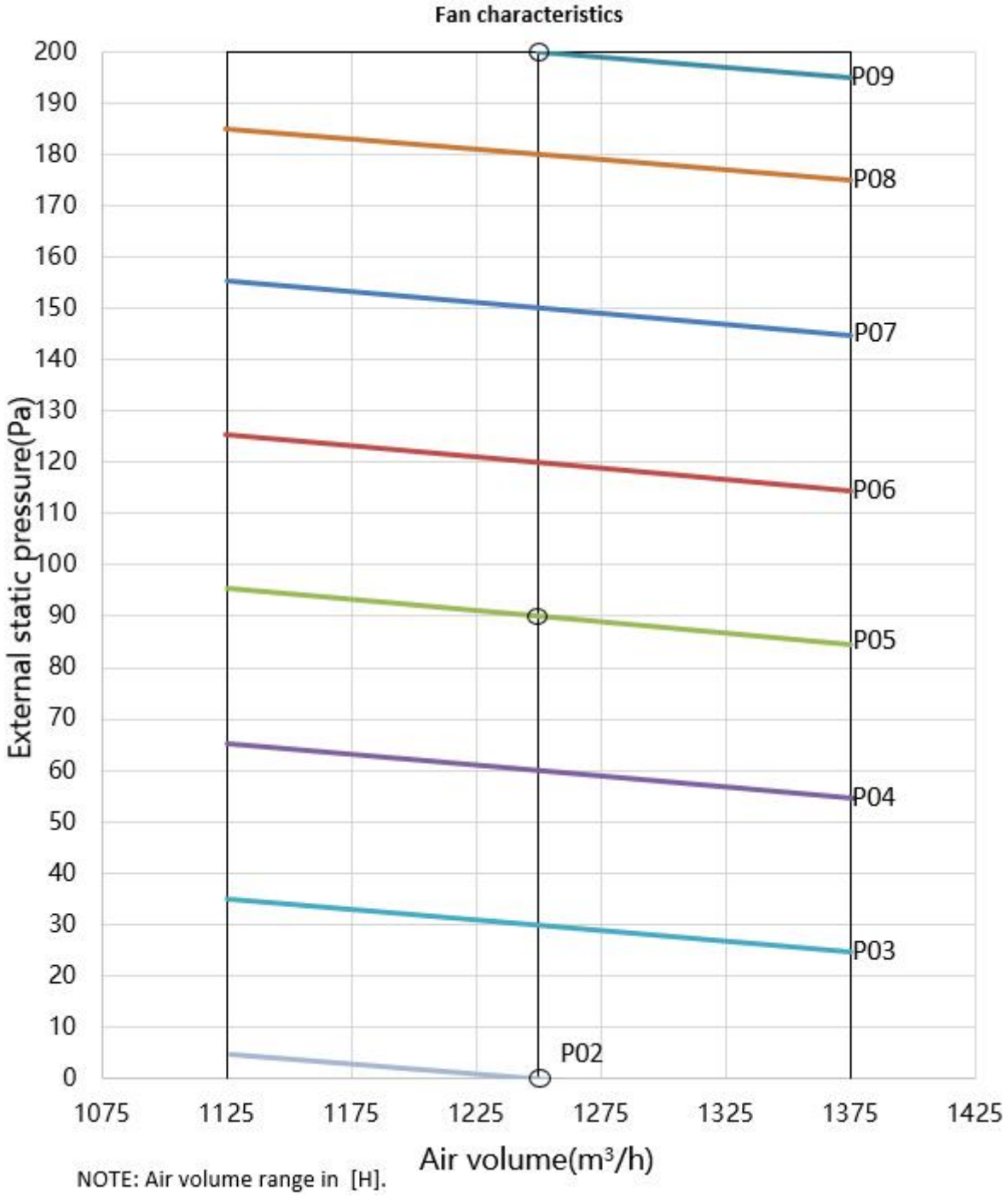

NOTE: Air volume range in [H].

GMV-ND30~42PHS/D-T(U)

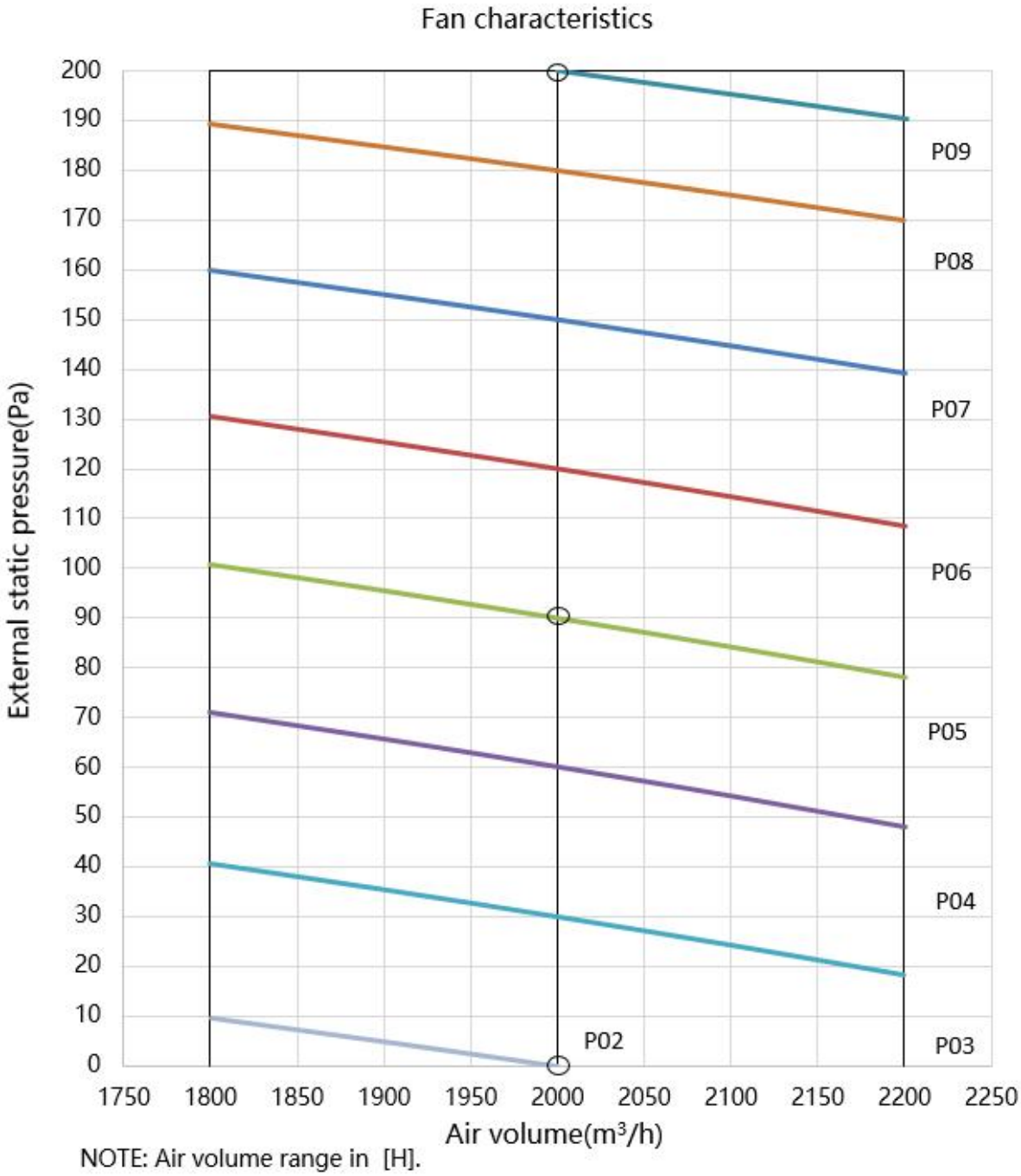

NOTE: Air volume range in [H].

GMV-ND48~54PHS/D-T(U)

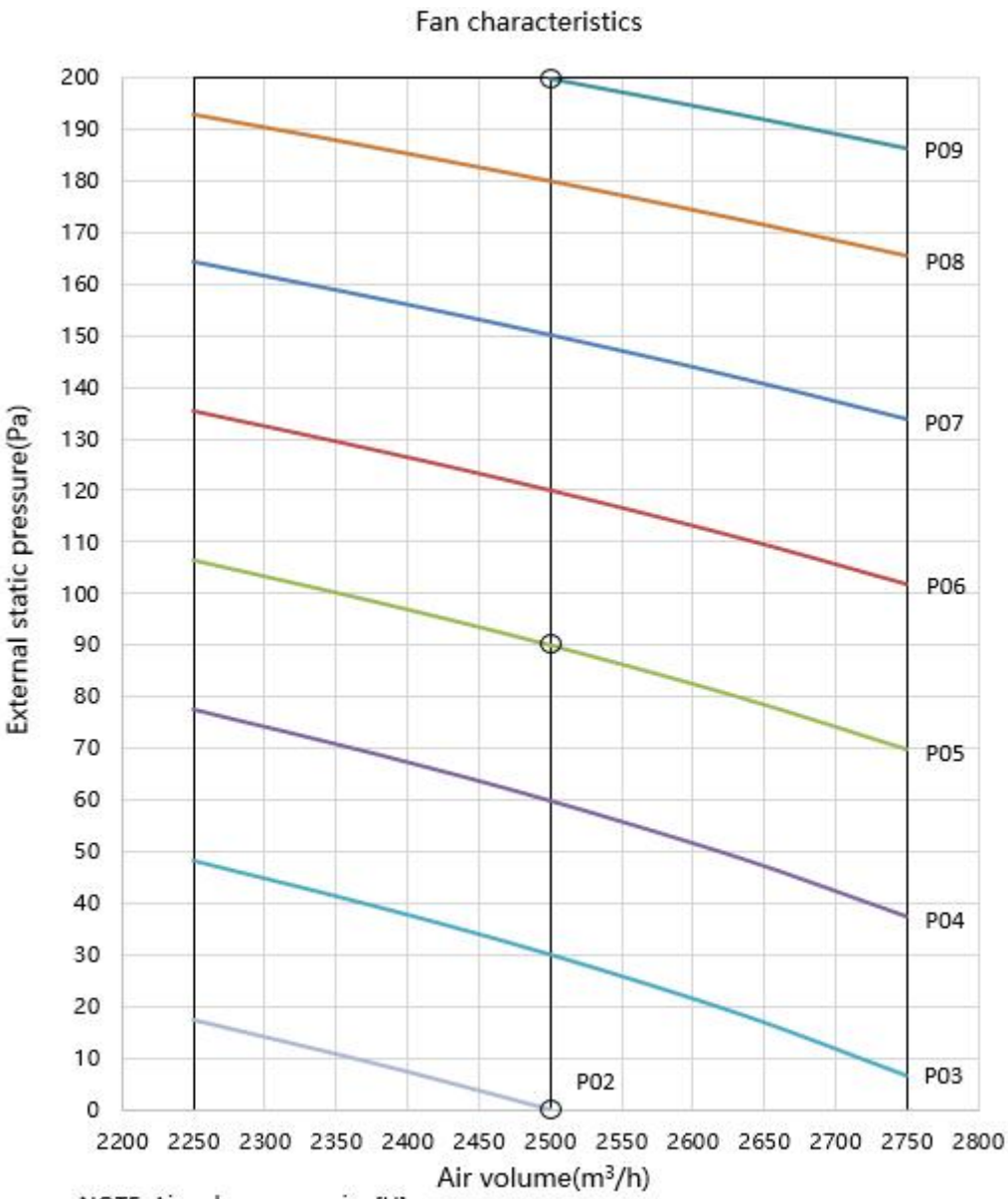

NOTE: Air volume range in [H].

7. Unit Installation Space Requirements

7.1 Precautions on the Indoor Unit Design

The following aspects must be specially noted in consideration of the indoor unit location:

(1) The location should satisfy the optimal airflow organization for air conditioner in the actual project, and implement the most uniform distribution of temperature.

(2) Avoid mixed use of air ducts for air supply and air return in different air conditioning areas.

(3) Rear air return is more recommended for lower noise of air return of the unit.

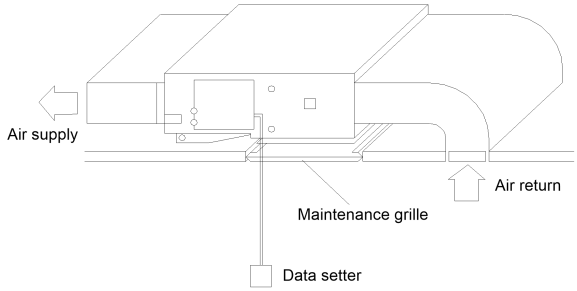

(4) When the rear air return mode is adopted, the distance from the return air duct to the back wall is at least more than 300mm.

(5) When the rear air return way is adopted, the distance between the bottom of the unit to the false ceiling is more than 50mm and the effective air return area of the false ceiling(S2) should not less than air return area of the unit(S1).

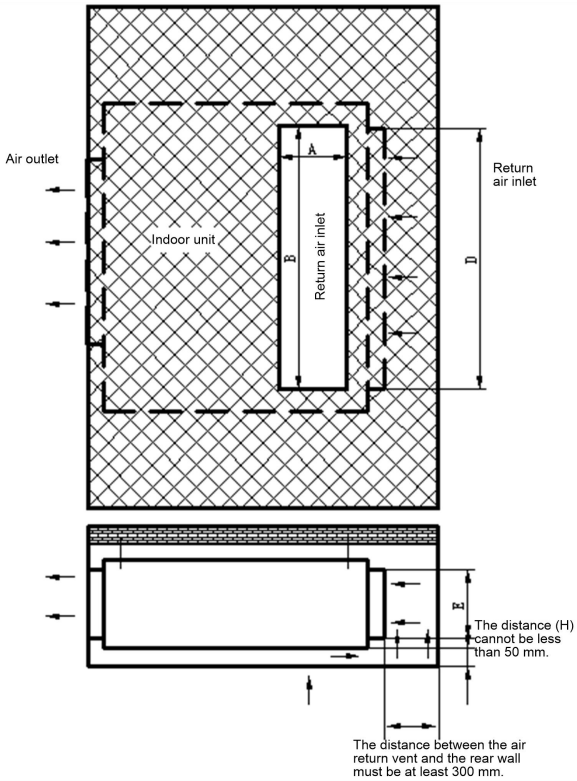

Air return area of the unit: S1 = D×E

Air return vent circumference of the ceiling: L = 2×(A+B)

Effective air return area of the ceiling: S2 = L×H

S2 cannot be smaller than S1. The distance H between the ceiling and the unit cannot be smaller than 50 mm.

(6) No barrier blocking air flow should exist at the air inlet or outlet of the indoor unit. The indoor unit should be installed at a position 2.3 m higher than the floor.

(7) For the indoor unit with the rated Cooling capacity greater than 5.6 kW, an air supply duct

should be additionally added, and the air duct and air outlet should be set properly to reduce noises.

(8) A sufficient maintenance space should be reserved in locating the unit.

7.2 Different Installation Space Requirements for Various of Indoor Units

7.2.1 Low ESP Duct Type Series

GMV-ND**PLS/A-T(U)

a) Outline and installation dimension

The following diagram is applicable for units with the cooling capacity ranging from 7kBtu/h to 22kBtu/h.

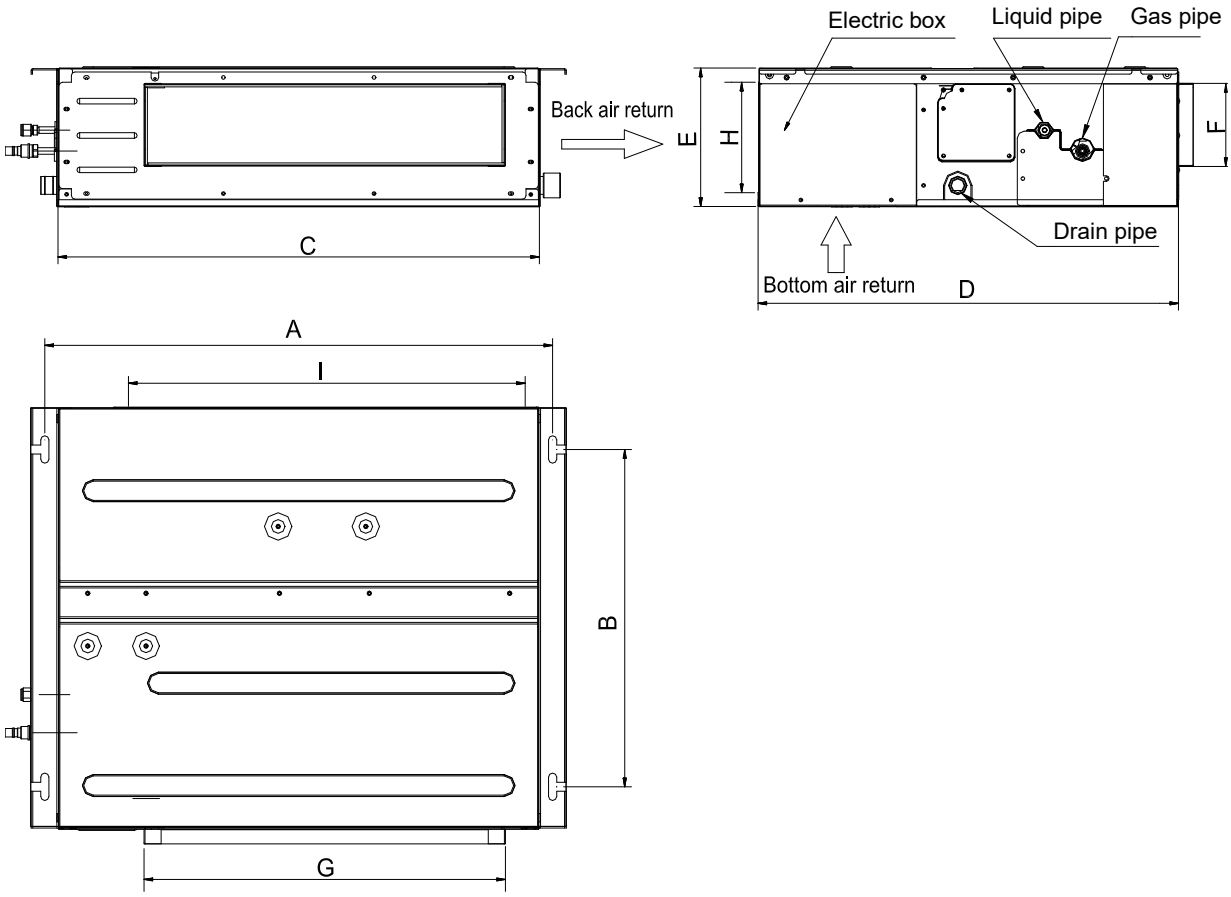

The following table lists the detailed dimensions.

Unit: mm(inch)

Model \ Item	A	B	C	D	E	F	G	H	I
GMV-ND07PLS/A-T(U) GMV-ND09PLS/A-T(U) GMV-ND12PLS/A-T(U)	742 (29 3/16)	491 (19 5/16)	700 (27 1/2)	615 (24 1/4)	200 (7 7/8)	121 (4 3/4)	528 (20 13/16)	161 (6 5/16)	580 (22 13/16)
GMV-ND14PLS/A-T(U)	942 (37 1/16)	491 (19 5/16)	900 (35 3/8)	615 (24 1/4)	200 (7 7/8)	121 (4 3/4)	728 (28 11/16)	161 (6 5/16)	780 (30 11/16)

Model \ Item	A	B	C	D	E	F	G	H	I
GMV-ND18PLS/A-T(U) GMV-ND22PLS/A-T(U)	1142 (44 15/16)	491 (19 5/16)	1100 (43 1/4)	615 (24 1/4)	200 (7 7/8)	121 (4 3/4)	928 (36 9/16)	161 (6 5/16)	980 (38 9/16)

b) Installation space

Unit: mm(inch)

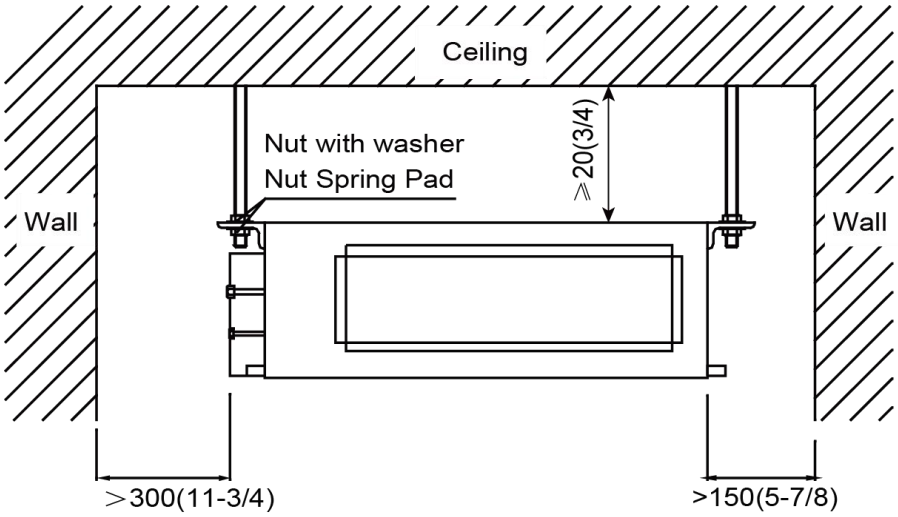

GMV-ND**PLS/B1-T(U)

a) Outline and installation dimension

The following diagram is applicable for units with the cooling capacity ranging from 05kBtu/h to 24kBtu/h.

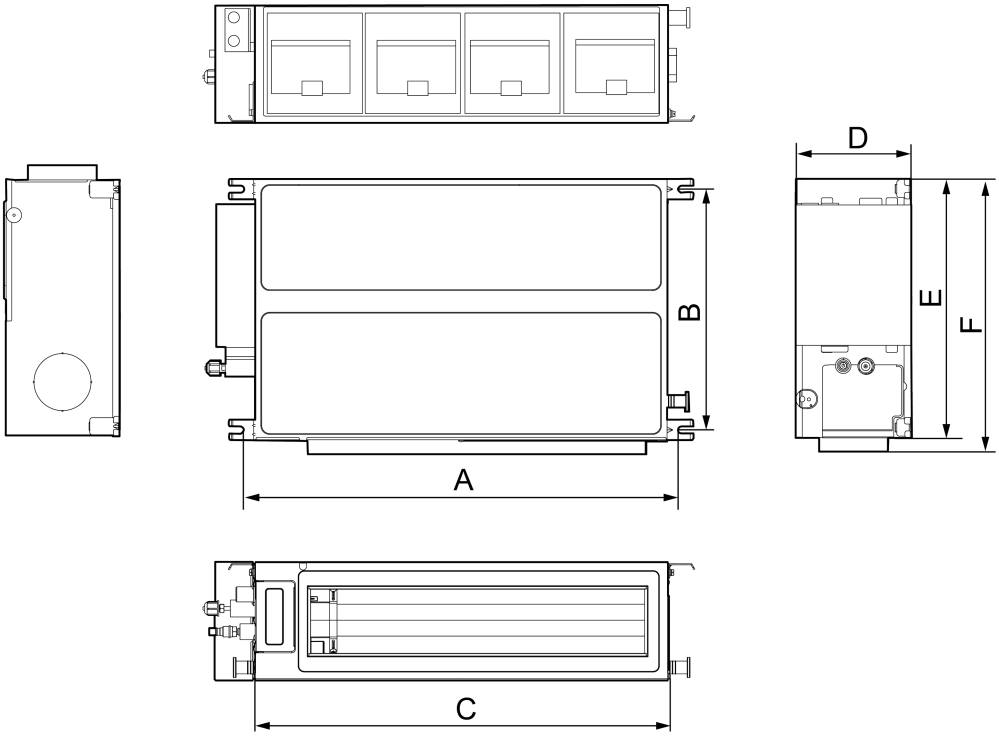

The following table lists the detailed dimensions.

Unit: mm(inch)

Item Model	A	B	C	D	E	F
GMV-ND05~12PLS/B1-T(U)	760 (30)	415 (16-3/8)	710 (27-15/16)	200 (7-14/16)	462 (18-3/16)	486 (19-2/16)
GMV-ND14~18PLS/B1-T(U)	1060 (41-3/4)	415 (16-3/8)	1010 (39-12/16)	200 (7-14/16)	462 (18-3/16)	486 (19-2/16)
GMV-ND24PLS/B1-T(U)	1360 (53-1/2)	415 (16-3/8)	1310 (51-9/16)	200 (7-14/16)	462 (18-3/16)	486 (19-2/16)

b) Installation space

Lift up the unit to the ceiling and secure it on the bolt. Use specialized nut to secure the unit.

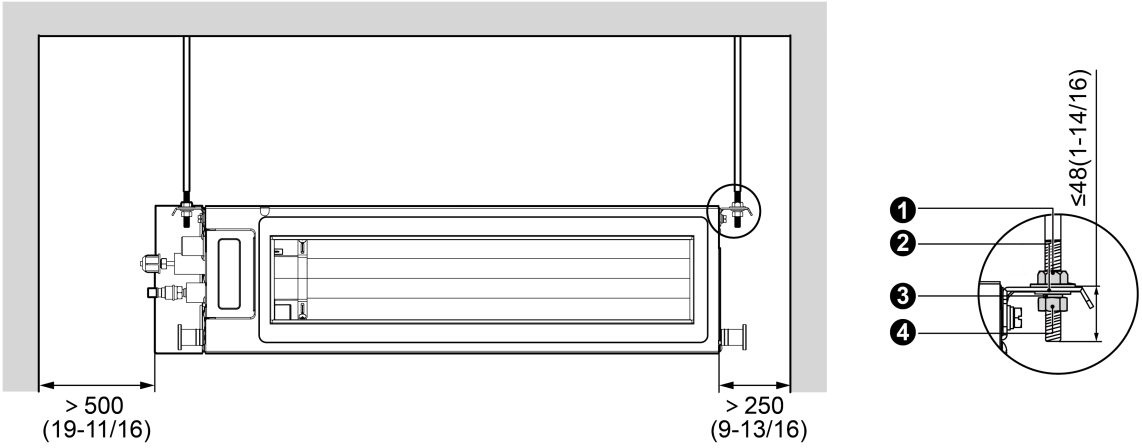

❶ Nut with washer ❷ Flat washer ❸ Spring washer ❹ Nut

7.2 .2 Slim Duct Type Indoor Unit

a) Outline and installation dimension

The following diagram is applicable for units with the cooling capacity ranging from 7kBtu/h to 24kBtu/h

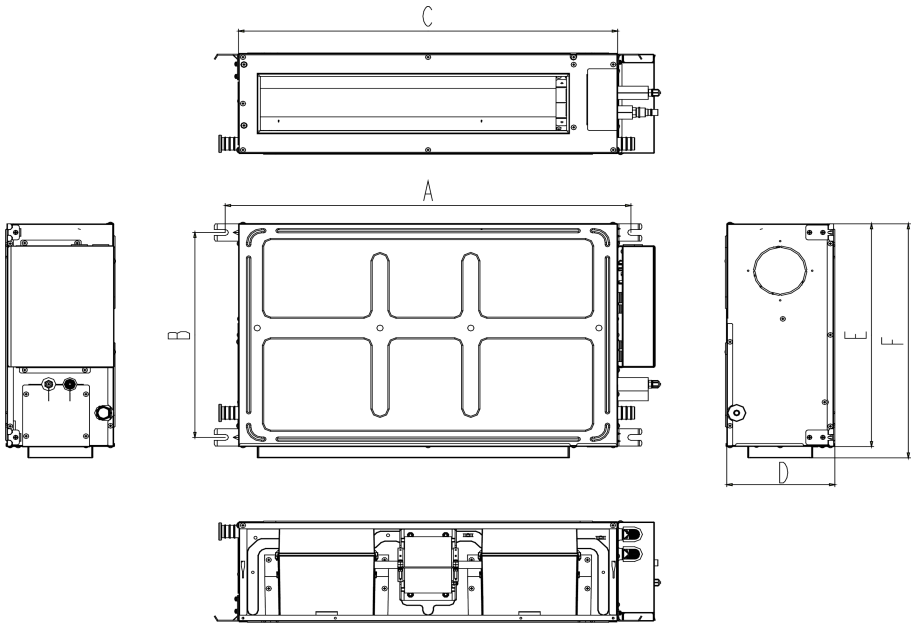

The following table lists the detailed dimensions.

Unit: mm(inch)

Model	A	B	C	D	E	F
GMV-ND07~12PLS/B-T(U)	760 (30)	415 (16-1/3)	710 (28)	200 (17-5/7)	462 (18-3/16)	486 (19-2/16)
GMV-ND14~18PLS/B-T(U)	1060 (41-3/4)	415 (16-1/3)	1010 (39-3/4)	200 (17-5/7)	462 (18-3/16)	486 (19-2/16)
GMV-ND24PLS/B-T(U)	1360 (53-1/2)	415 (16-1/3)	1310 (39-3/4)	200 (17-5/7)	462 (18-3/16)	486 (19-2/16)

b) Installation space

Unit: mm(inch)

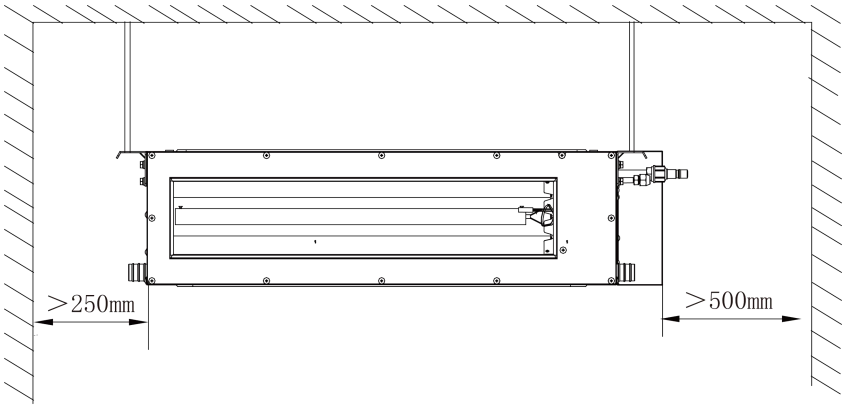

7.2.3 High ESP Duct Type Series

a) Outline and installation dimension

The following diagram is applicable for units with the cooling capacity ranging from 18 k Btu/h to 48 k Btu/h.

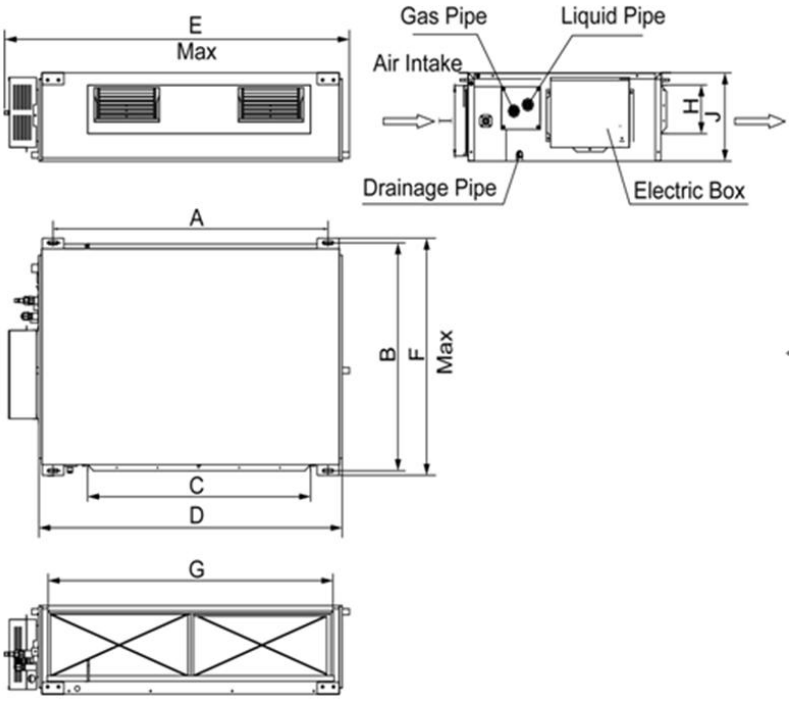

The following table lists the detailed dimensions.

Unit: mm(inch)

Model	A	B	C	D	E	F	G	H	I	J
GMV-ND18PHS/A-T(U)	1101 (43-3/8)	517 (20-3/8)	820 (32-1/4)	1159 (45-5/8)	1271 (50)	558 (22)	1002 (39-1/2)	160 (6-1/4)	235 (9-1/4)	268 (10-1/2)
GMV-ND24PHS/A-T(U)										
GMV-ND30PHS/A-T(U)	1011 (39-3/4)	748 (29-1/2)	820 (32-1/4)	1115 (43-7/8)	1229 (48-3/8)	775 (30-1/2)	979 (38-1/2)	160 (6-1/4)	231 (9-1/8)	290 (11-3/8)
GMV-ND36PHS/A-T(U)										
GMV-ND42PHS/A-T(U)										
GMV-ND48PHS/A-T(U)										

The following diagram is applicable for units with the cooling capacity 72、 96kBtu/h.

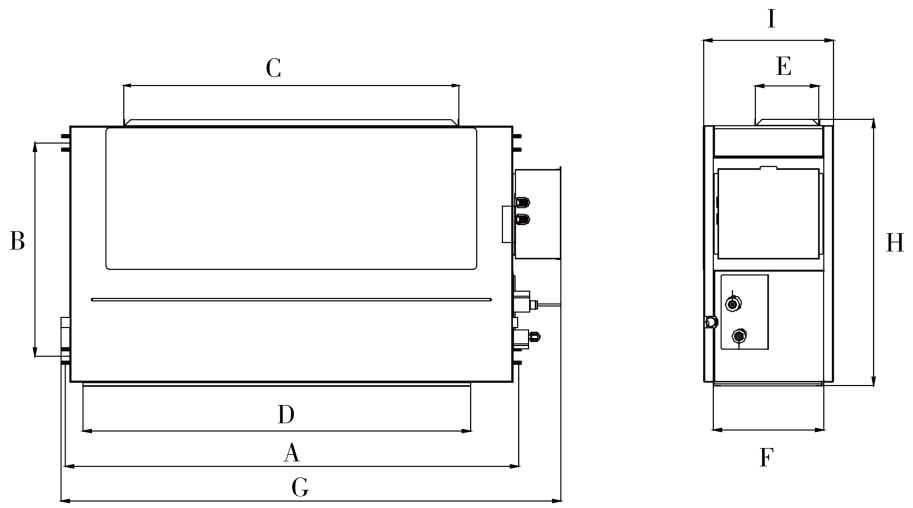

The following table lists the detailed dimensions.

Unit: mm(inch)

Model	A	B	C	D	E	F	G	H	I
GMV-ND72H/A-T(U)	1353 (53-1/4)	632 (24-7/8)	992 (39)	1150 (45-1/4)	192 (7-1/2)	327 (12-7/8)	1483 (58-3/8)	791 (31-1/8)	385 (15-1/8)
GMV-ND96PH/A-T(U)	1563 (61-1/8)	706 (27-3/4)	992 (39)	1350 (53-1/8)	192 (7-1/2)	402 (15-7/8)	1686 (66-3/8)	870 (34-1/4)	450 (17-3/4)

b) Installation space

Model：GMV-ND18PHS/A-T(U)~ GMV-ND48PHS/A-T(U)

Unit: mm(inch)

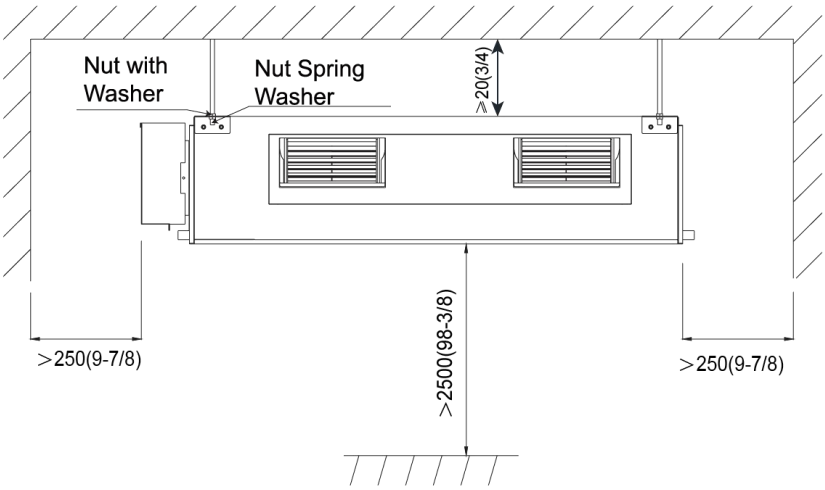

Model：GMV-ND72PH/A-T(U)、GMV-ND96PH/A-T(U)

Unit: mm(inch)

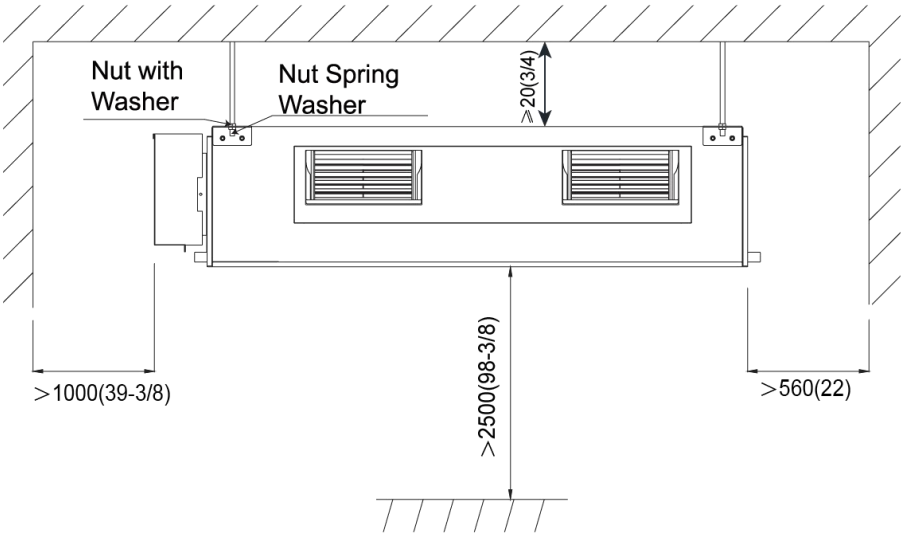

7.2.4 Four-way Cassette Indoor Unit

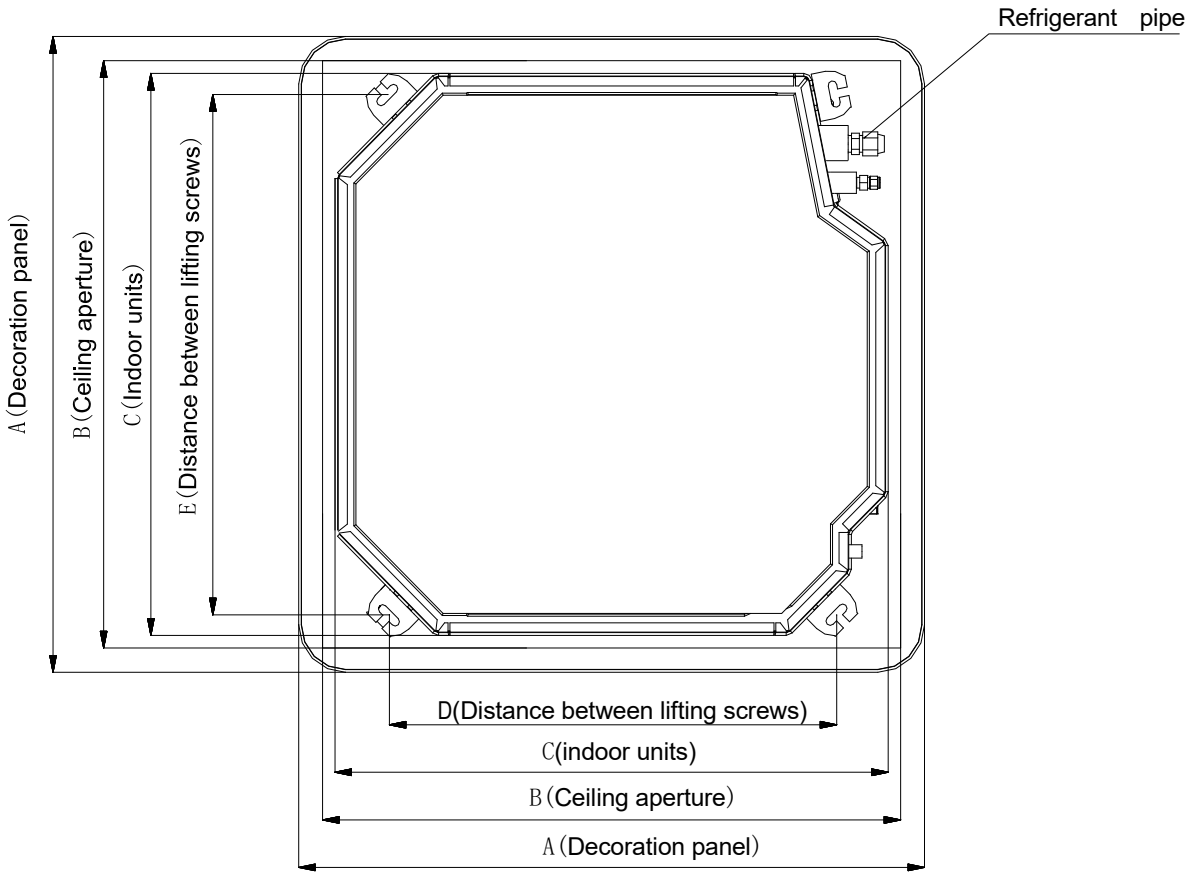

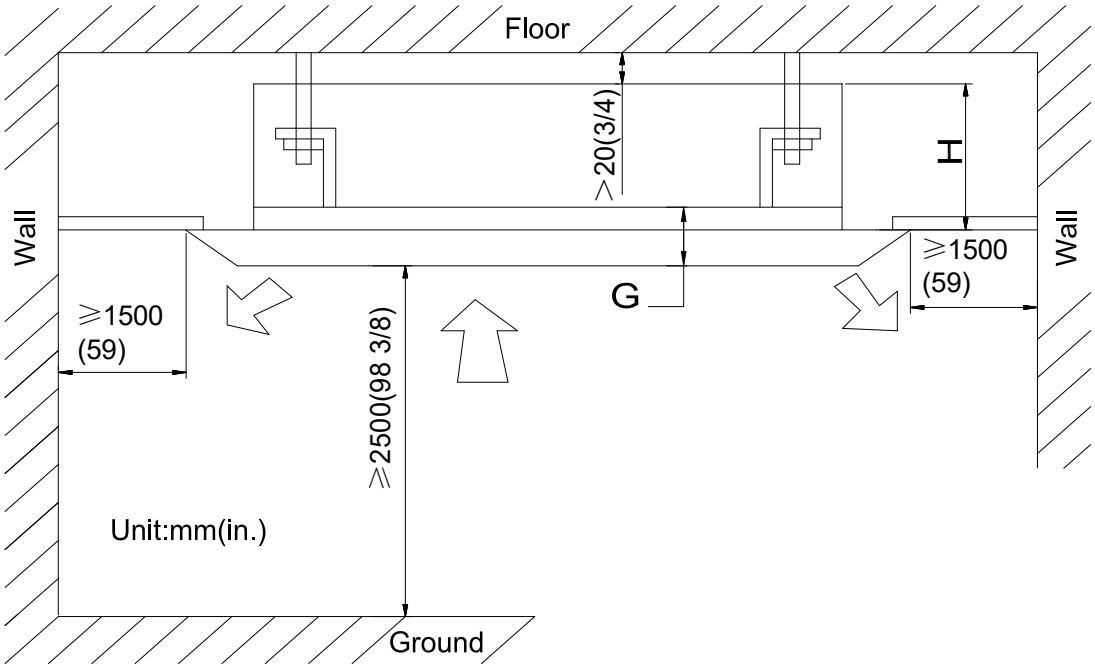

The following table lists the detailed dimensions.

Unit: mm(inch)

Model	A	B	C	D	E	G	H
GMV-ND07T/A-T(U)	950 (37 3/8)	890 (35)	840 (33)	680 (26 3/4)	780 (30 3/4)	65 (2 1/2)	210 (8 1/4)
GMV-ND09T/A-T(U) GMV-ND12T/A-T(U) GMV-ND15T/A-T(U) GMV-ND18T/A-T(U) GMV-ND24T/A-T(U)	950 (37 3/8)	890 (35)	840 (33)	680 (26 3/4)	780 (30 3/4)	65 (2 1/2)	260 (10 1/4)
GMV-ND30T/A-T(U) GMV-ND36T/A-T(U) GMV-ND42T/A-T(U) GMV-ND48T/A-T(U)	950 (37 3/8)	890 (35)	840 (33)	680 (26 3/4)	780 (30 3/4)	65 (2 1/2)	340 (13 3/8)

7.2.5 Fresh air processing unit

a) Outline and installation dimension

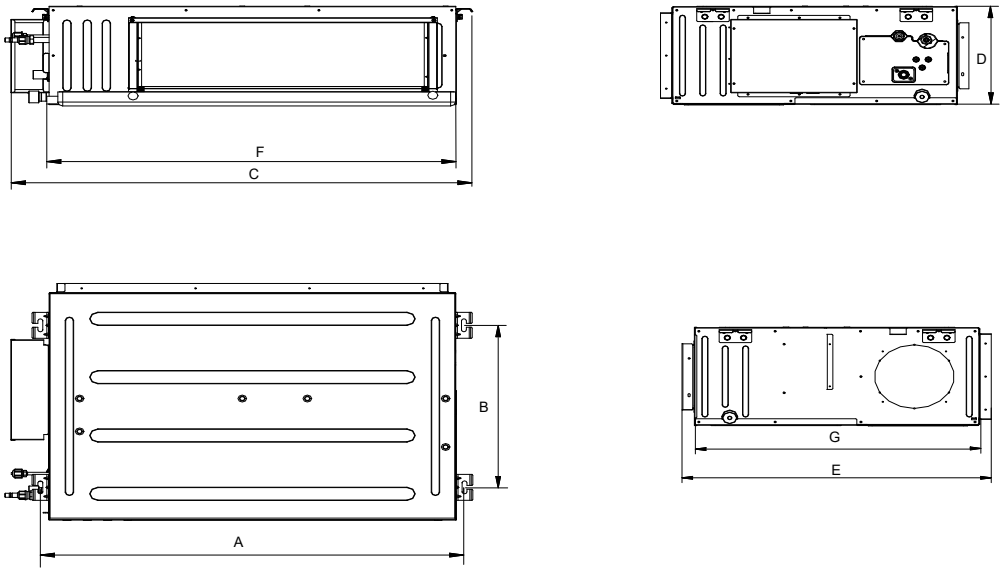

The table below lists the detailed dimensions.

Unit：mm(inch)

Model	A	B	C	D	E	F	G
GMV-NDX42P/A-T(U)	1440 (56-11/16)	500 (19-11/16)	1580 (62-7/32)	300 (11-13/16)	754 (29-11/16)	1400 (55-1/8)	700 (27-9/16)
GMV-NDX48P/A-T(U)	1440 (56-11/16)	500 (19-11/16)	1580 (62-7/32)	300 (11-13/16)	754 (29-11/16)	1400 (55-1/8)	700 (27-9/16)

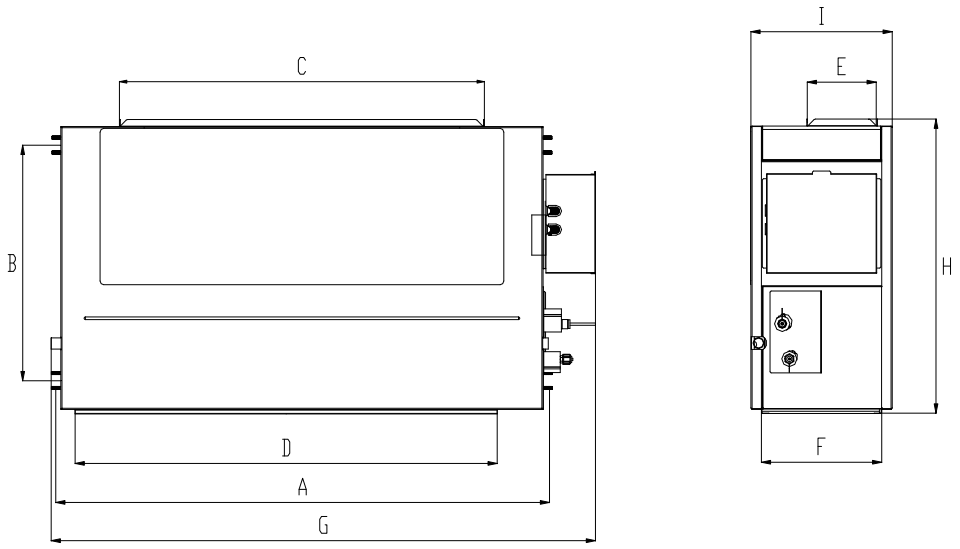

The table below lists the detailed dimensions.

Unit: mm(inch)

Item / Model	A	B	C	D	E	F	G	H	I
GMV-NDX54 P/A-T(U)	1353 (53-1/4)	632 (24-7/8)	992 (39)	1150 (45-1/4)	192 (7-1/2)	327 (12-7/8)	1483 (58-3/8)	791 (31-1/8)	385 (15-3/16)
GMV-NDX72 P/A-T(U)	1353 (53-1/4)	632 (24-7/8)	992 (39)	1150 (45-1/4)	192 (7-1/2)	327 (12-7/8)	1483 (58-3/8)	791 (31-1/8)	385 (15-3/16)
GMV-NDX96 P/A-T(U)	1353 (53-1/4)	632 (24-7/8)	992 (39)	1150 (45-1/4)	192 (7-1/2)	327 (12-7/8)	1483 (58-3/8)	791 (31-1/8)	385 (15-3/16)

b) Installation space

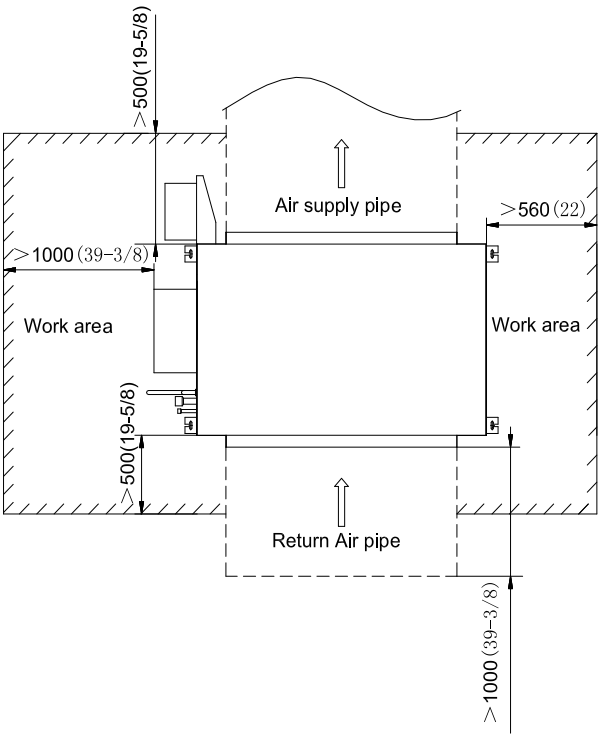

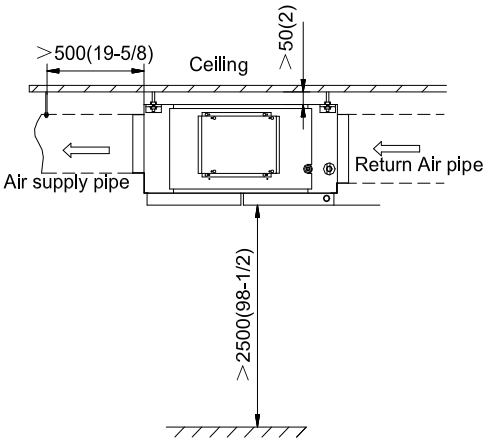

NOTICE !

a Installation of the unit must be in accordance with National Electric Codes and local safety regulations.

b Improper installation will affect unit's performance, so do not install the unit by yourself. Please contact local dealer to arrange professional technicians for the installation.

c Do not connect power until all installation work is finished.

7.2.6 Floor Ceiling Unit

a) Outline and installation dimension

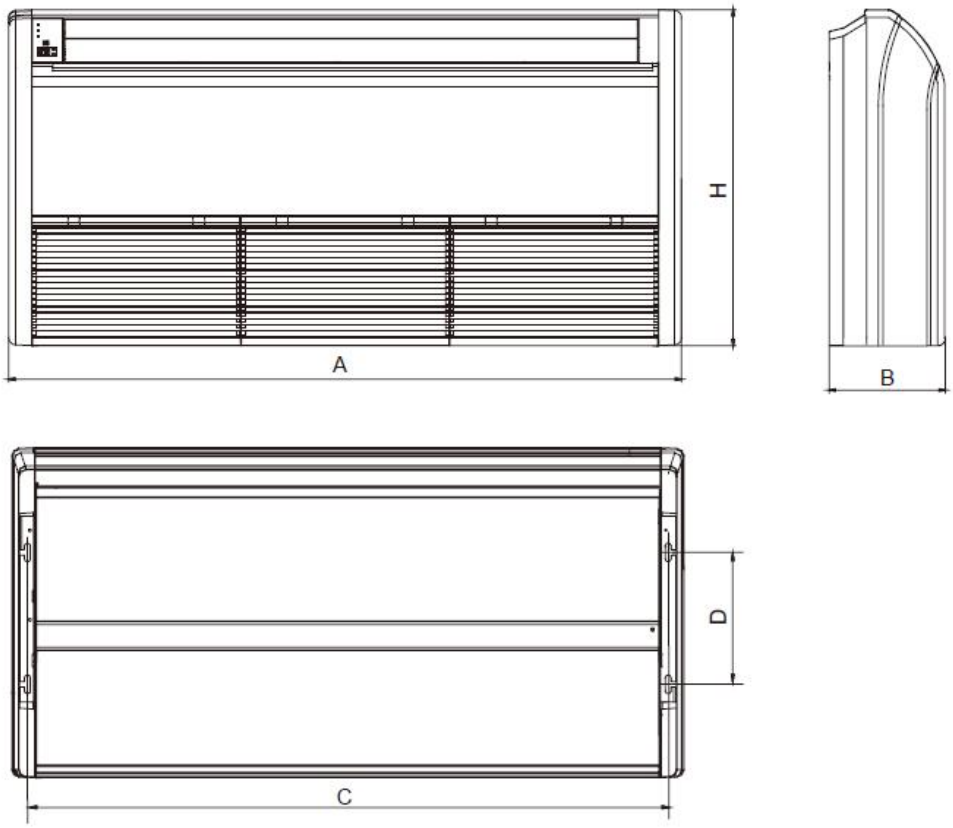

The following table lists the detailed dimensions.

Unit: mm(inch)

Models:	A	B	C	D	H
GMV-ND09ZD/A-T(U) GMV-ND12ZD/A-T(U) GMV-ND18ZD/A-T(U)	1220 (48)	225 (8-7/8)	1158 (45-5/8)	280 (11)	700 (27-9/16)
GMV-ND24ZD/A-T(U) GMV-ND30ZD/A-T(U)	1420 (56)	245 (9-5/8)	1354 (53-5/16)	280 (11)	700 (27-9/16)
GMV-ND36ZD/A-T(U) GMV-ND42ZD/A-T(U) GMV-ND48ZD/A-T(U)	1700 (66-15/16)	245 (9-5/8)	1634 (64-5/16)	280 (11)	700 (27-9/16)

b) Installation space

Floor type

Unit: mm(inch)

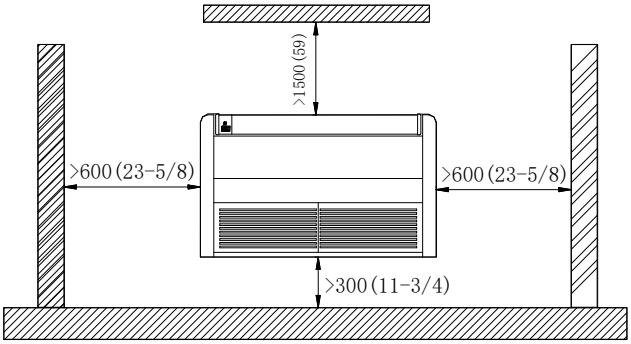

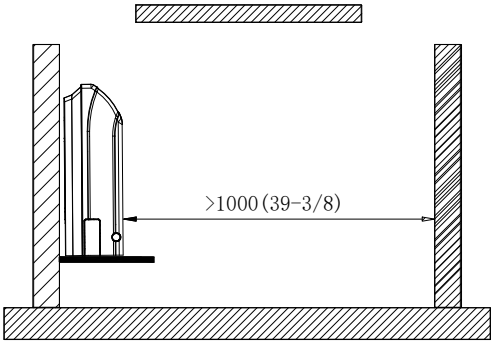

Ceiling type

Unit: mm(inch)

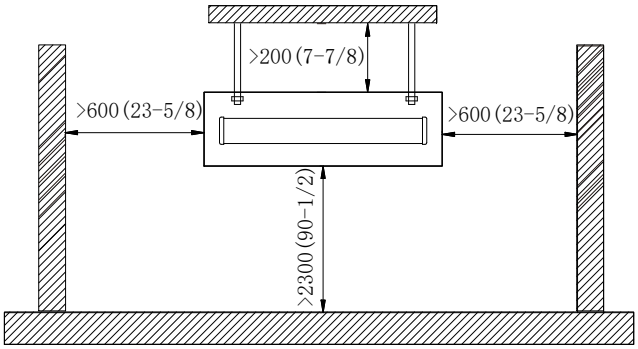

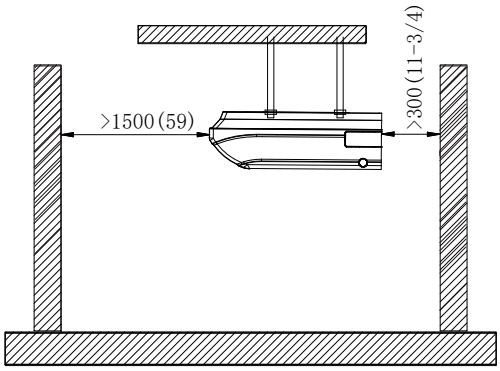

7.2.7 Wall-Mounted Unit

External Dimensions

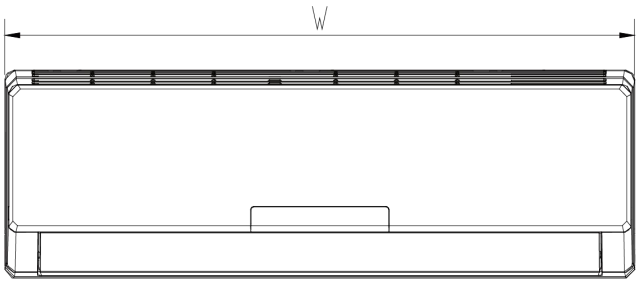

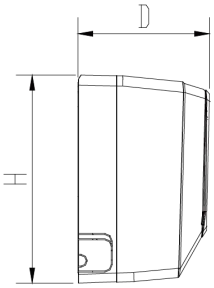

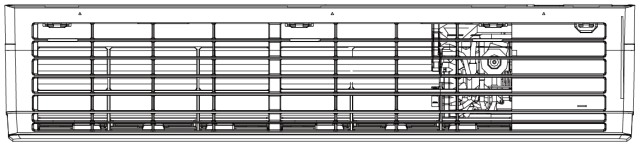

The table below lists the detailed dimensions.

Unit: mm(inch)

Model	W	H	D
GMV-N07G/A3A-D(U) GMV-N09G/A3A-D(U)	843 (33-3/16)	275 (10-13/16)	180 (7-1/16)
GMV-N12G/A3A-D(U) GMV-N18G/A3A-D(U)	940 (37)	298 (11-3/4)	200 (7-7/8)
GMV-N24G/A3A-D(U)	1008 (39-11/16)	319 (12-9/16)	221 (8-11/16)
GMV-ND06G/B4B-T(U) GMV-ND07G/B4B-T(U) GMV-ND09G/B4B-T(U) GMV-ND12G/B4B-T(U)	845 (33-1/4)	289 (11-3/8)	209 (8-1/4)
GMV-ND14G/B4B-T(U)	970 (38-3/16)	300 (11-13/16)	224 (8-13/16)
GMV-ND18G/B4B-T(U) GMV-ND24G/B4B-T(U)	1078 (42-7/16)	325 (12-13/16)	246 (9-11/16)
GMV-ND30G/B4B-T(U) GMV-ND36G/B4B-T(U)	1350 (53-1/8)	326 (12-13/16)	258 (10-3/16)

Installation and Maintenance Spaces (Unit: mm)

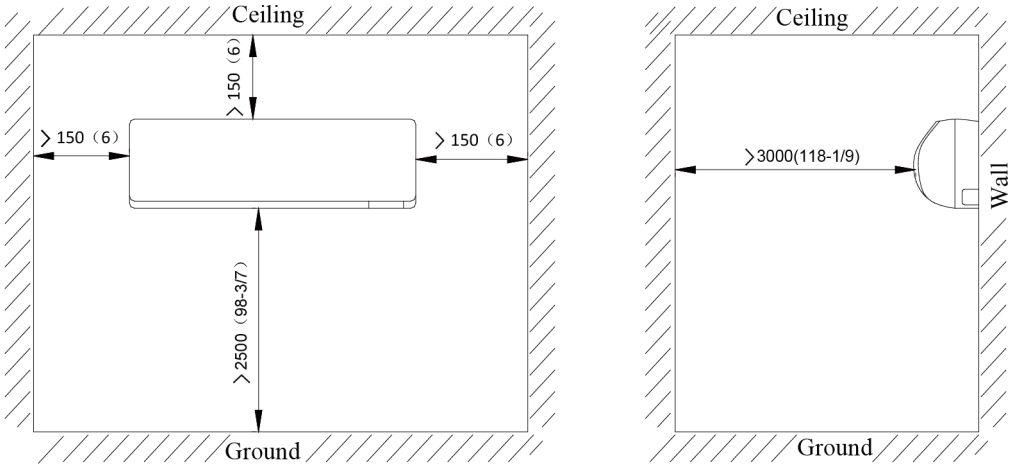

7.2.8 Console Type

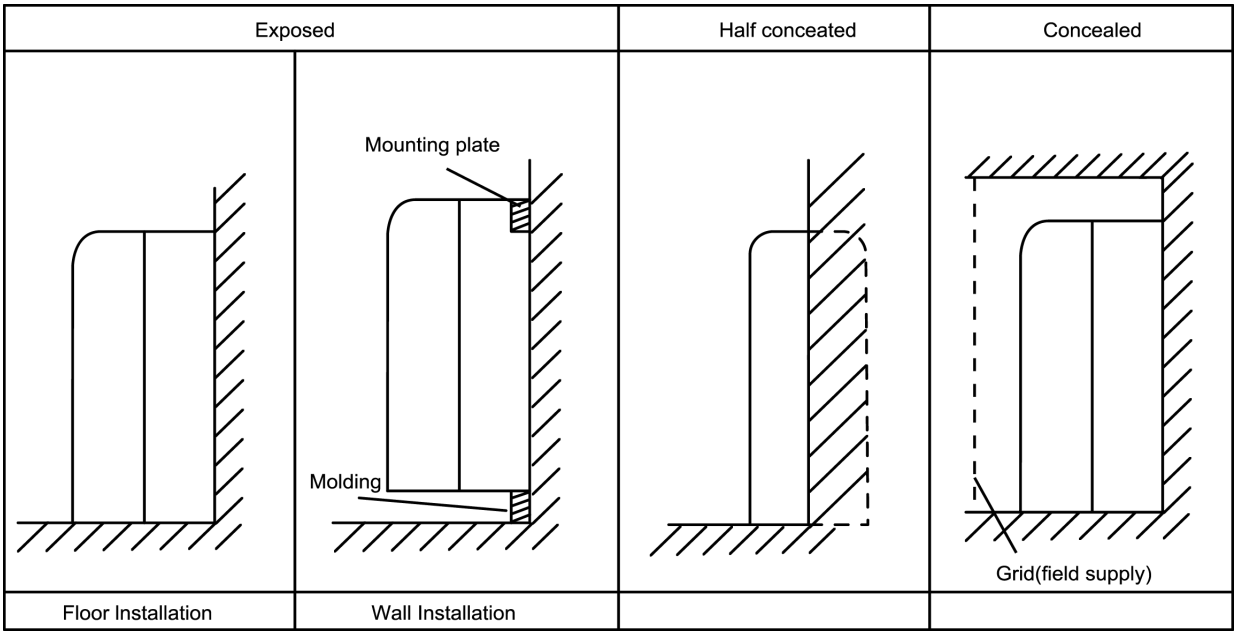

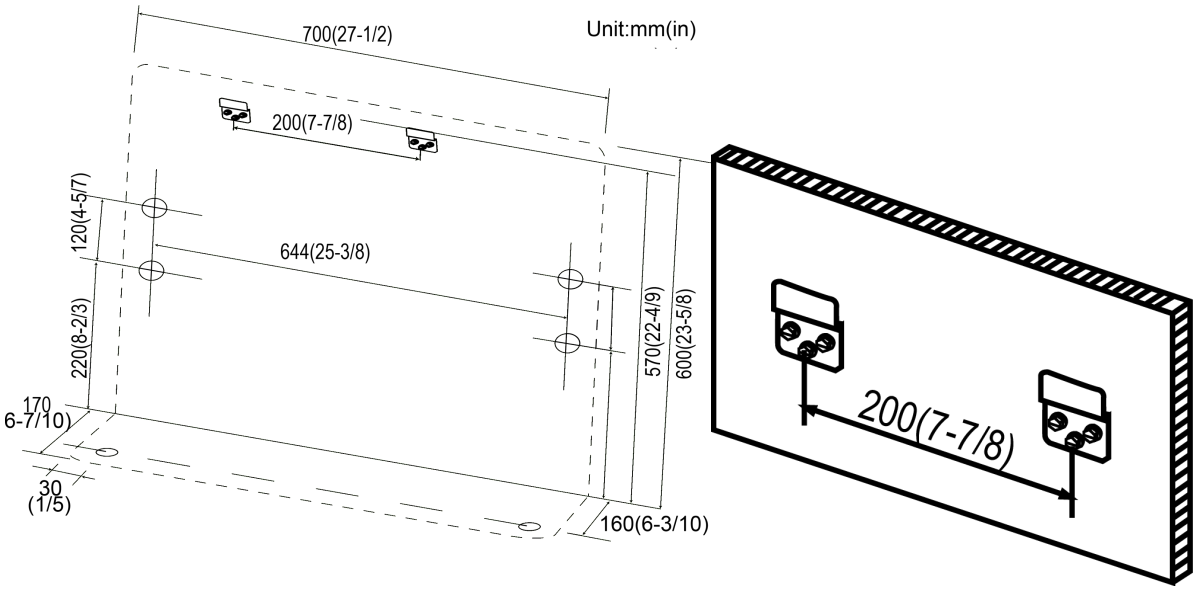

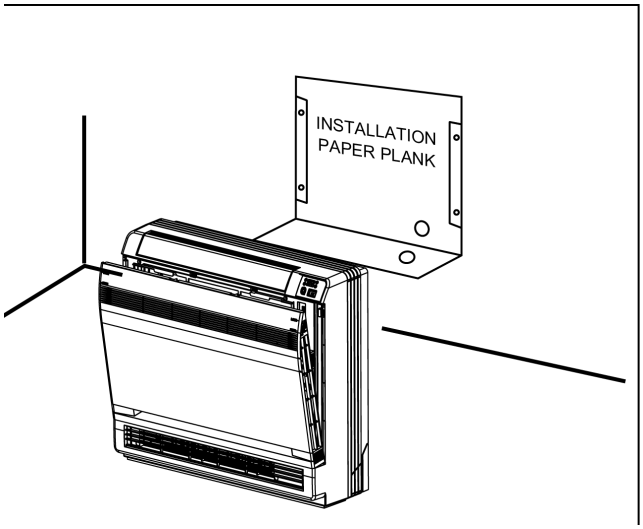

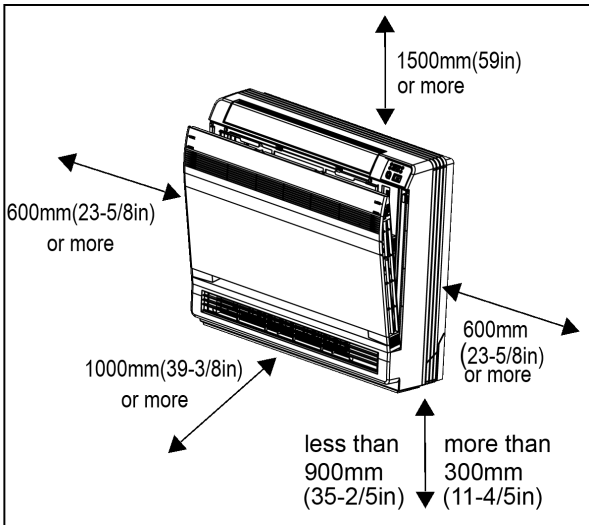

7.2.9 Two-way Cassette Type

7.2.9.1 GMV-ND**TS/A-T(U)

Outline and installation dimension

Unit: mm(inch)

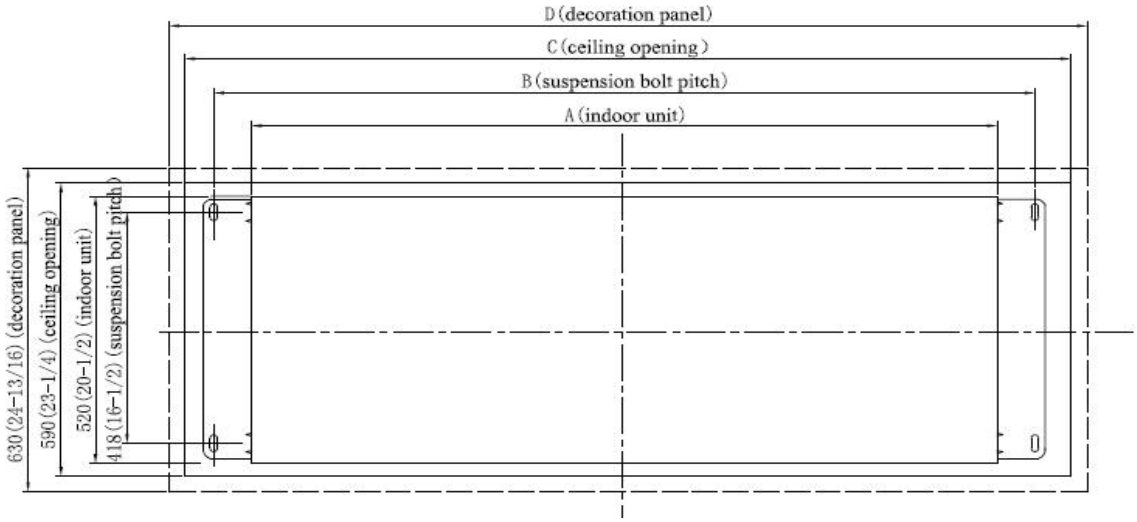

Unit: mm(inch)

Model	A	B	C	D
GMV-ND09TS/A-T(U)	1200(47-1/4)	1252(49-5/16)	1403(55-1/4)	1443(56-13/16)
GMV-ND12TS/A-T(U) GMV-ND15TS/A-T(U)	1200(47-1/4)	1252(49-5/16)	1403(55-1/4)	1443(56-13/16)
GMV-ND18TS/A-T(U) GMV-ND24TS/A-T(U)	1200(47-1/4)	1252(49-5/16)	1403(55-1/4)	1443(56-13/16)

Installation space

Unit: mm(inch)

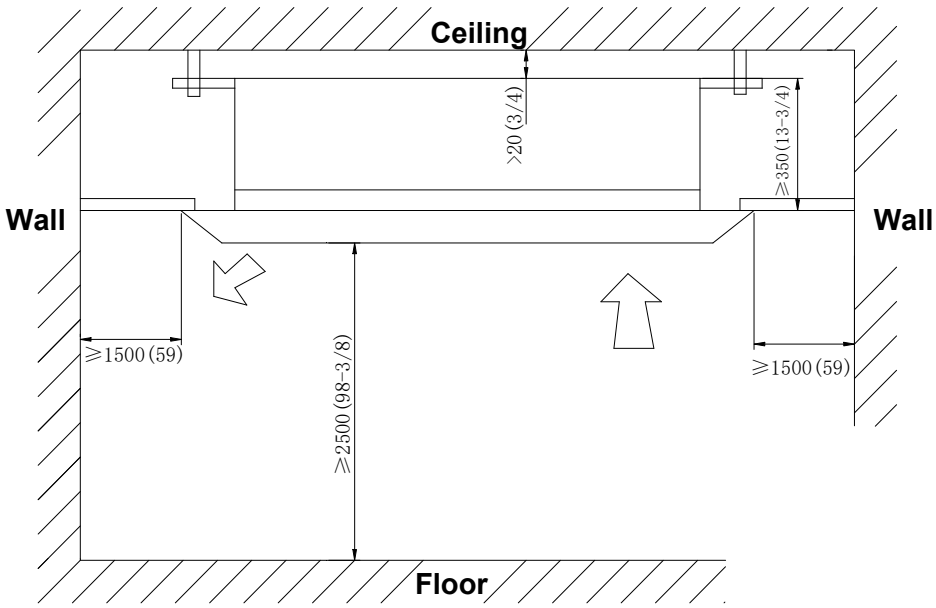

7.2.9.2 GMV-ND**TS/B-T(U)

Outline and installation dimension

Unit: mm(inch)

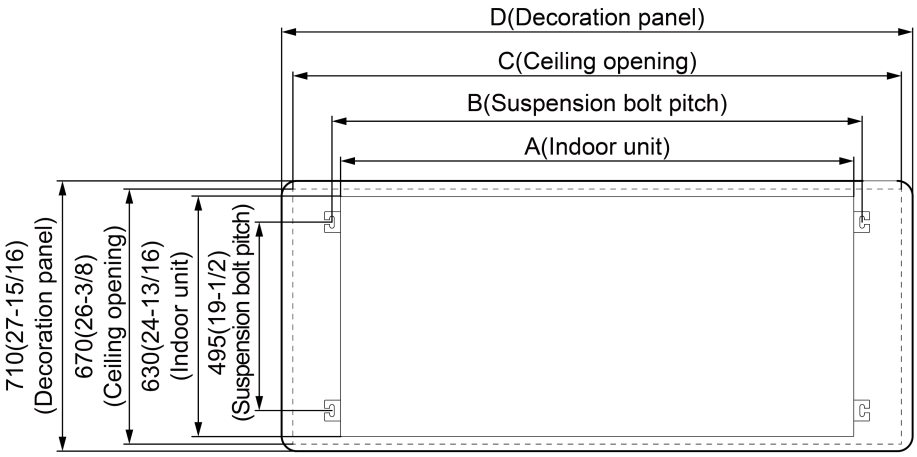

Unit: mm(inch)

Model	A	B	C	D
GMV-ND09TS/B-T(U)	790(31-1/8)	834(32-7/8)	990(39)	1100(43-1/4)
GMV-ND12TS/B-T(U) GMV-ND15TS/B-T(U)	790(31-1/8)	834(32-7/8)	990(39)	1100(43-1/4)
GMV-ND18TS/B-T(U) GMV-ND24TS/B-T(U)	790(31-1/8)	834(32-7/8)	990(39)	1100(43-1/4)

Installation space

Unit: mm(inch)

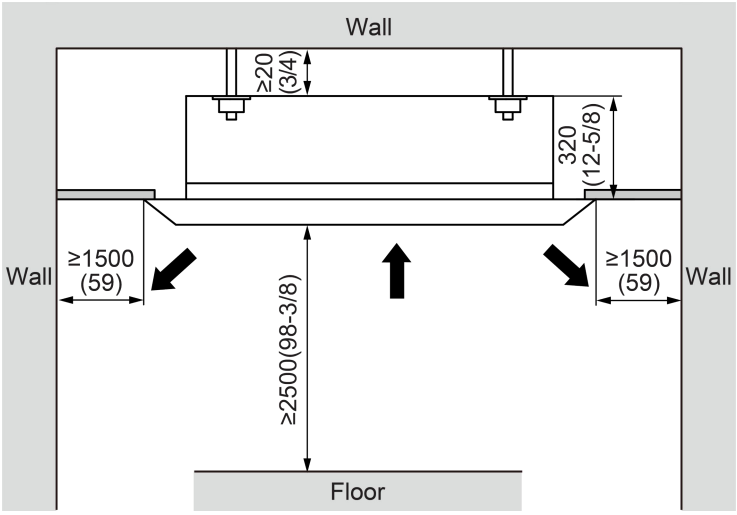

7.2.10 Compact Four-way Cassette Type Indoor Unit

Outline and installation dimension

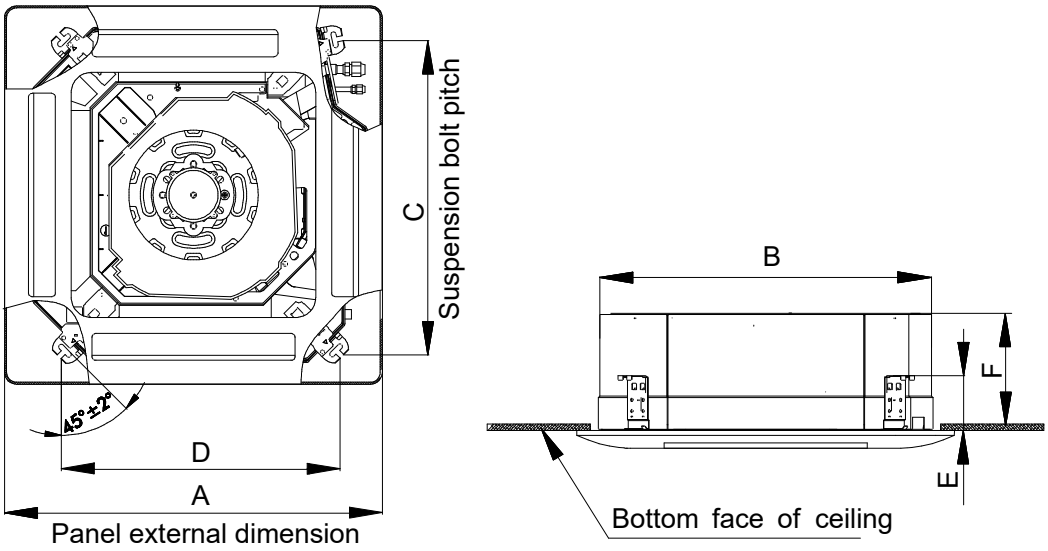

Unit: mm(inch)

Model	A	B	C	D	E	F
GMV-ND07T/B-T(U) GMV-ND09T/B-T(U) GMV-ND12T/B-T(U) GMV-ND15T/B-T(U) GMV-ND18T/B-T(U)	670 (26-3/8)	596 (23-1/2)	600 (23-5/8)	571 (22-1/2)	145 (5-11/16)	240 (9-1/2)

Installation space

Unit:mm(in.)

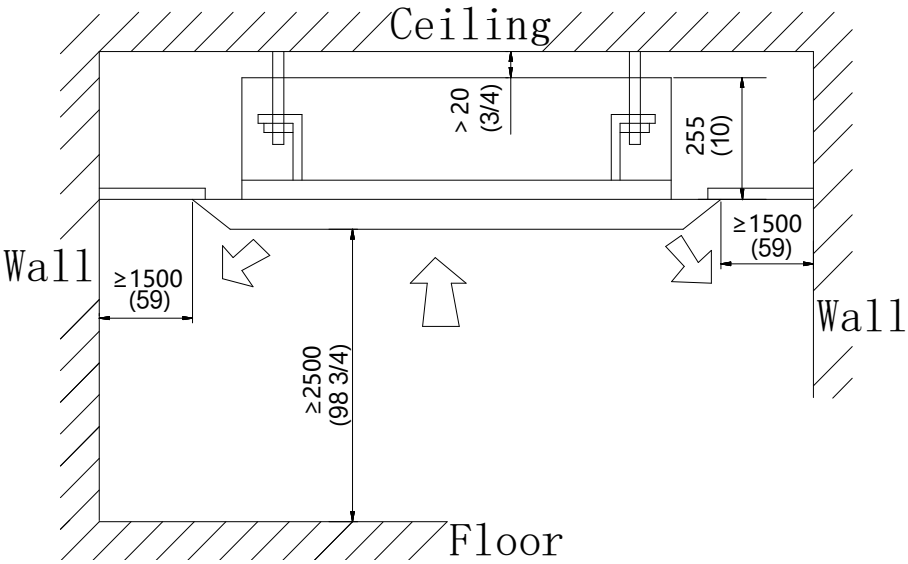

7.2.11 Super High Static Pressure Duct Type Indoor Unit

Outline and installation dimension

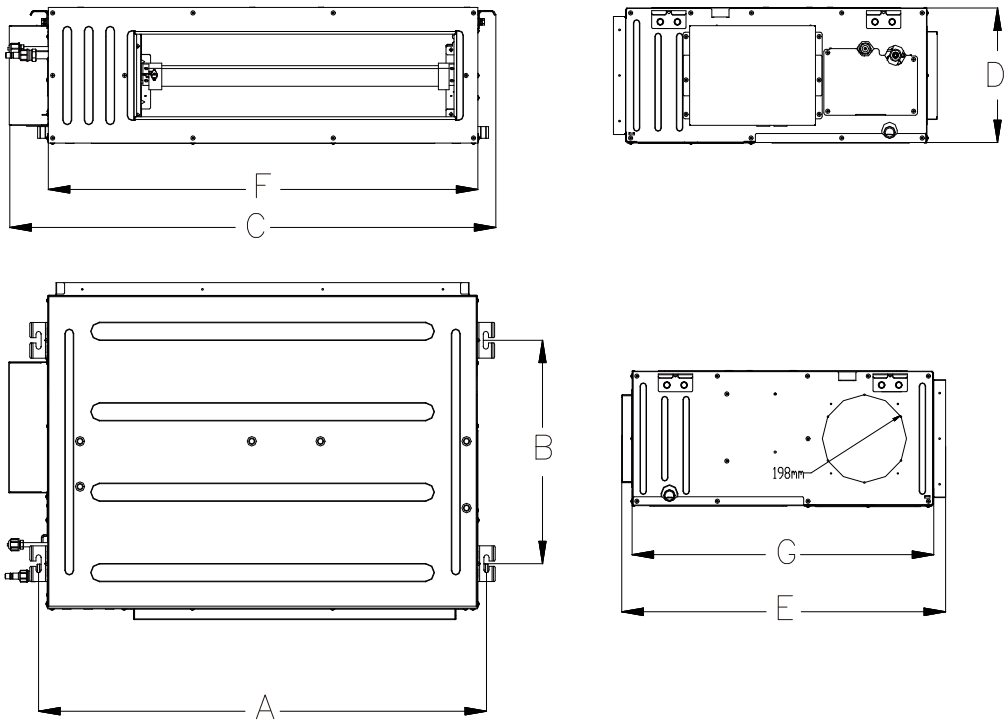

The following table lists the detailed dimensions.

GMV-ND**PHS/B-T(U)

Unit: mm(inch)

Model	A	B	C	D	E	F	G
GMV-ND07~09PHS/B-T(U)	740 (29-1/8)	500 (19-11/16)	830 (32-11/16)	300 (11-13/16)	754 (29-11/16)	700 (27-9/16)	700 (27-9/16)
GMV-ND12~24PHS/B-T(U)	1040 (40-15/16)	500 (19-11/16)	1130 (44-31/64)	300 (11-13/16)	754 (29-11/16)	1000 (39-3/8)	700 (27-9/16)
GMV-ND30~42PHS/B-T(U)	1440 (56-11/16)	500 (19-11/16)	1530 (60-1/4)	300 (11-13/16)	754 (29-11/16)	1400 (55-1/8)	700 (27-9/16)
GMV-ND48~54PHS/B-T(U)	1440 (56-11/16)	500 (19-11/16)	1580 (62-7/32)	300 (11-13/16)	754 (29-11/16)	1400 (55-1/8)	700 (27-9/16)

GMV-ND**PHS/D-T(U)

Unit: mm(inch)

Model	A	B	C	D	E	F	G
GMV-ND07PHS/D-T(U) GMV-ND09PHS/D-T(U)	740 (29-1/8)	500 (19-11/16)	830 (32-11/16)	300 (11-13/16)	754 (29-11/16)	700 (27-9/16)	700 (27-9/16)
GMV-ND12PHS/D-T(U) GMV-ND15PHS/D-T(U) GMV-ND18PHS/D-T(U) GMV-ND22PHS/D-T(U) GMV-ND24PHS/D-T(U)	1040 (40-15/16)	500 (19-11/16)	1130 (44-1/2)	300 (11-13/16)	754 (29-11/16)	1000 (39-3/8)	700 (27-9/16)
GMV-ND30PHS/D-T(U) GMV-ND36PHS/D-T(U) GMV-ND42PHS/D-T(U) GMV-ND48PHS/D-T(U) GMV-ND54PHS/D-T(U)	1440 (56-11/16)	500 (19-11/16)	1540 (62-5/8)	300 (11-13/16)	754 (29-11/16)	1400 (55-1/8)	700 (27-9/16)

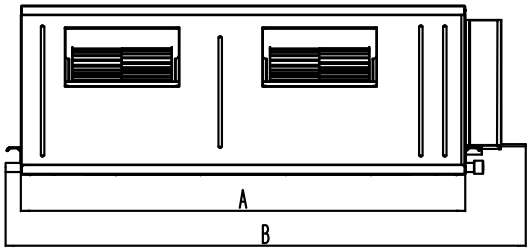

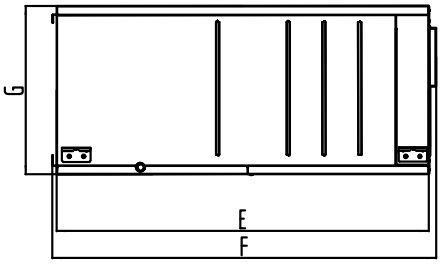

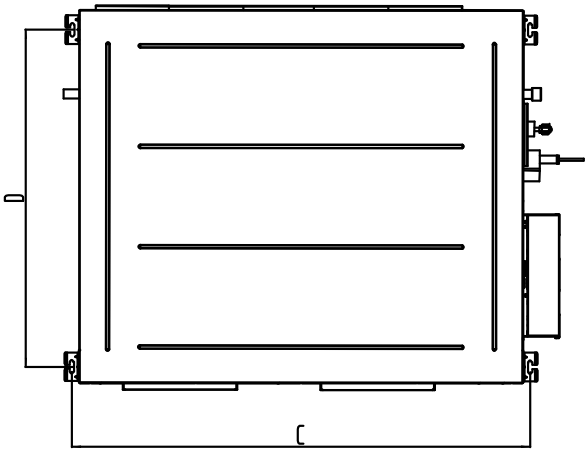

The following table lists the detailed dimensions.

GMV-ND**PH/D-T(U)

Unit: mm(inch)

Model	A	B	C	D	E	F	G
GMV-ND72~96PH/B-T(U)	1240 (48-3/4)	1452 (57-1/8)	1280 (50-3/8)	940 (38)	1040 (41)	1071 (42-1/8)	470 (18-1/2)

Installation space

Unit: mm(inch)

GMV-ND07~54PHS/B-T(U)

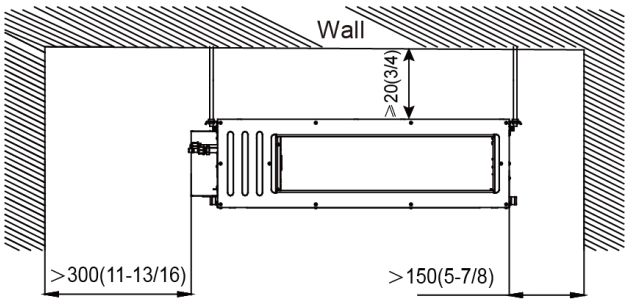

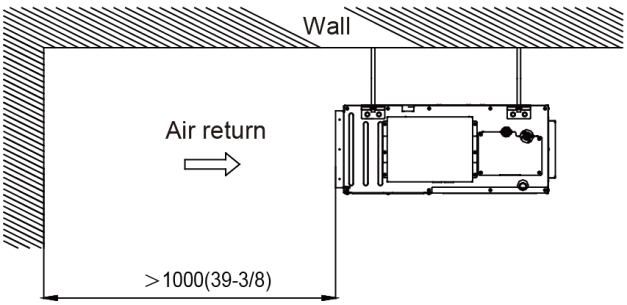

GMV-ND72~96PH/B-T(U)

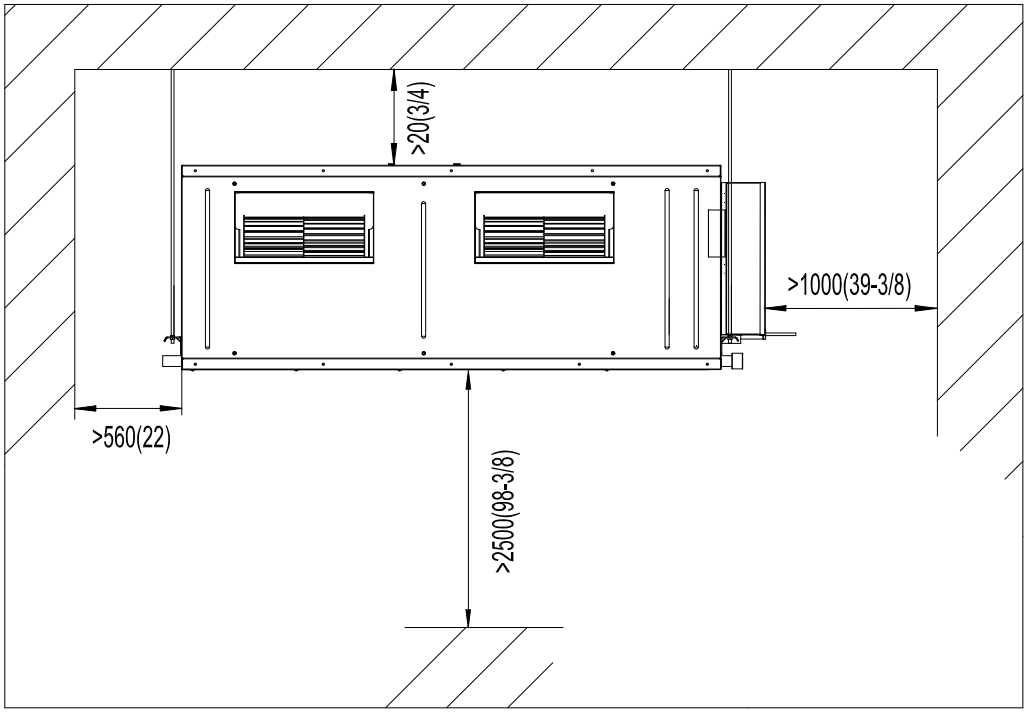

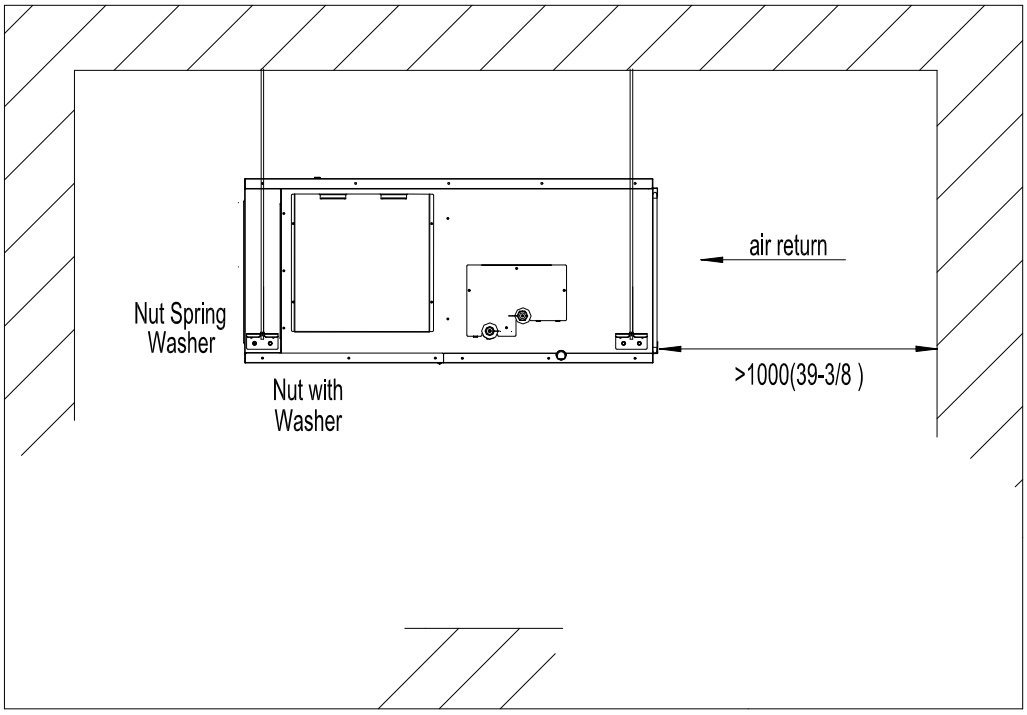

7.2.12 Air Handler Type Indoor Unit

7.2.12.1 Outline and installation dimension

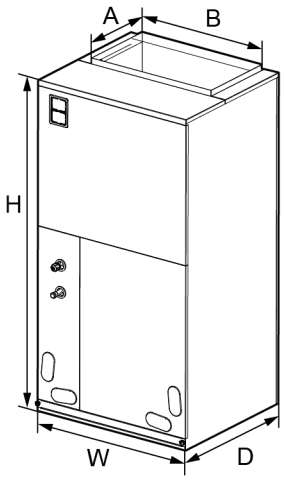

The following table lists the detailed dimensions.

Unit: mm(inch)

MODEL	DIMENSION				
	W	D	H	A	B
GMV-ND09A/A-T(U)	460 (18-1/8)	540 (21-1/4)	1105 (43-1/2)	295 (11-5/8)	426 (16-3/4)
GMV-ND12A/A-T(U)	460 (18-1/8)	540 (21-1/4)	1105 (43-1/2)	295 (11-5/8)	426 (16-3/4)
GMV-ND18A/A-T(U)	460 (18-1/8)	540 (21-1/4)	1105 (43-1/2)	295 (11-5/8)	426 (16-3/4)
GMV-ND24A/A-T(U)	460 (18-1/8)	540 (21-1/4)	1105 (43-1/2)	295 (11-5/8)	426 (16-3/4)
GMV-ND30A/A-T(U)	460 (18-1/8)	540 (21-1/4)	1105 (43-1/2)	295 (11-5/8)	426 (16-3/4)
GMV-ND36A/A-T(U)	540 (21-1/4)	540 (21-1/4)	1224 (48-1/4)	295 (11-5/8)	508 (20)
GMV-ND42A/A-T(U)	540 (21-1/4)	540 (21-1/4)	1224 (48-1/4)	295 (11-5/8)	508 (20)
GMV-ND48A/A-T(U)	630 (24-7/8)	540 (21-1/4)	1224 (48-1/4)	295 (11-5/8)	508 (20)
GMV-ND54A/A-T(U)	630 (24-7/8)	540 (21-1/4)	1224 (48-1/4)	295 (11-5/8)	508 (20)

MODEL	DIMENSION				
	W	D	H	A	B
GMV-ND09A/B-T(U)	460(18-1/8)	540(21-1/4)	1105(43-1/2)	295(11-5/8)	426(16-3/4)
GMV-ND12A/B-T(U)	460(18-1/8)	540(21-1/4)	1105(43-1/2)	295(11-5/8)	426(16-3/4)
GMV-ND18A/B-T(U)	460(18-1/8)	540(21-1/4)	1105(43-1/2)	295(11-5/8)	426(16-3/4)

MODEL	DIMENSION				
	W	D	H	A	B
GMV-ND24A/B-T(U)	460(18-1/8)	540(21-1/4)	1105(43-1/2)	295(11-5/8)	426(16-3/4)
GMV-ND30A/B-T(U)	460(18-1/8)	540(21-1/4)	1105(43-1/2)	295(11-5/8)	426(16-3/4)
GMV-ND36A/B-T(U)	540(21-1/4)	540(21-1/4)	1224(48-1/4)	295(11-5/8)	508(20)
GMV-ND42A/B-T(U)	540(21-1/4)	540(21-1/4)	1224(48-1/4)	295(11-5/8)	508(20)
GMV-ND48A/B-T(U)	630(24-3/4)	540(21-1/4)	1448 (57)	295(11-5/8)	508(20)
GMV-ND54A/B-T(U)	630(24-3/4)	540(21-1/4)	1448 (57)	295(11-5/8)	508(20)
GMV-ND60A/B-T(U)	630(24-3/4)	540(21-1/4)	1448 (57)	295(11-5/8)	508(20)

7.2.12.2 Installation notice

When installing the air handler, take consideration to minimize the length of refrigerant tubing as much as possible. Do not install the air handler in a location either above or below the condenser that violates the instructions provided with the condenser. Service clearance is to take precedence. Allow a minimum of 24” in front of the unit for service clearance. When installing in an area directly over a finished ceiling (such as an attic), an emergency drain pan is required directly under the unit. See local and state codes for requirements. When installing this unit in an area that may become wet, elevate the unit with a sturdy, non-porous material. If the unit is installed in a area which may lead to damage for the unit, (i.e. a garage) it is advised to install a protective barrier to prevent such damage.

This air handler is designed for a complete supply and return ductwork system. These duct type indoor units are used to supply conditioned air to one zone. Do not operate this product without all ductwork attached.

Based upon the actual conditions, if air handler is installed as type (A), the air handler should be concealed in a specific room or space and make sure the air handler is not accessible to the general public.

Based upon the actual conditions, if air handler is installed as type (B), make sure that there is enough space for care and maintenance and the height between the air handler and ground is above 2500mm. And the air handler is not accessible to the general public.

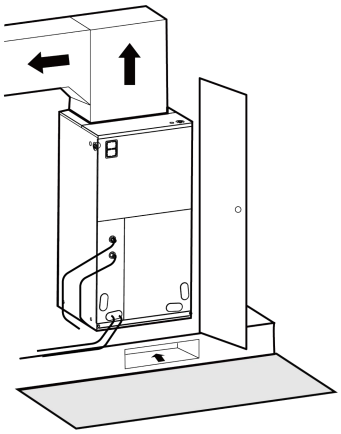

(A)

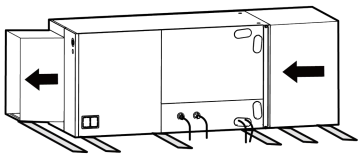

(B)

7.2.12.3 Electric heater

(1) The air handlers listed in this manual do not have factory installed electric heater. Electric heater is available as an accessory. Please refer to installation instructions provided with heater kit for the correct installation procedure.

(2) Refer to the “installing electric heater” section of this manual and the instructions provided with the heater kit for the correct installation procedure.

(3) The electrical characteristics of the air handler, the electric heater kit, and the supply power should be identical. If the electric heater is needed, please refer to the information below, It is forbidden to use the electric heater other than those recommended.

(4) E-HEAT mode setting method: under off status, press ON/OFF and Menu button for 5s to turn on or turn off E-heat mode. After that, the wired remote control pop-up box shows "Setting is done" for 1s, and indoor unit can set “Electric heating mode”. When E-HEAT mode has been set and indoor unit operates under heating mode, if outdoor unit stops operation because of error, indoor unit will switch to operate under electric heating mode.

(5) After the electric heater is shutdown, the fan of indoor unit will delay for a few minutes and then shut down so that the indoor unit can blow the waste heat and relieve the heat accumulation in the air duct.

(6) During installation and debugging, pay attention to verify the switch sequence of electric heater and fan, ensure the fan must be turned on when electric heater is operationing and ensure the electric heater is turned off before the fan to avoid unsafe.

7.2.12.3.1 Electric heater kits available

Model	Electric heater	Description	Manufacturer of electric heater
GMV-ND09A/B-T(U) GMV-ND12A/B-T(U) GMV-ND18A/B-T(U)	21-4227-00	Circuit breaker, 5 kW electric heater	TUTCO
GMV-ND24A/B-T(U) GMV-ND30A/B-T(U) GMV-ND36A/B-T(U)	21-4227-00 21-4216-00 21-4216-01	Circuit breaker, 5 kW、8 kW、10 kW electric heater	
GMV-ND42A/B-T(U) GMV-ND48A/B-T(U) GMV-ND54A/B-T(U) GMV-ND60A/B-T(U)	21-4227-00 21-4216-00 21-4216-01 21-4217-00	Circuit breaker, 5 kW、8 kW、10 kW、15 kW electric heater	

7.2.12.3.2 Electric heater kits installation

(1) Ensure that all power supply is disconnected prior to installing the heater kit.

(2) A means of strain relief and conductor protection must be provided at the supply wire entrance into cabinet.

(3) Use copper conductors only.

(4) Installation must follow national electric code and other applicable codes.

(5) If this appliance is installed in an enclosed area such as a garage or utility room with any carbon monoxide producing appliance, ensure the area is properly ventilated.

1) Refer to the Table for appropriate heater kit.

2) Check any physical damage, do not install damaged heater kit.

3) Remove the upper access panel from air handler.

4) Remove cover plate from air handler.

5) Slide the heater kit in to the slot and secure element plate with previously removed screws.

6) Insert power leads into the circuit breaker lugs or stripped red and black wires (for heater kit without circuit breaker) and tighten.

7) Connect ground wire to ground lug.

8) Knock off appropriate area of the plastic circuit breaker cover on the access panel of the air handler. Knock off the holes according to the actual installation number and positions of circuit breakers. If circuit breaker is not installed, do not knock off the holes; otherwise, electric shock may occur.

9) Replace access panel and check operation.

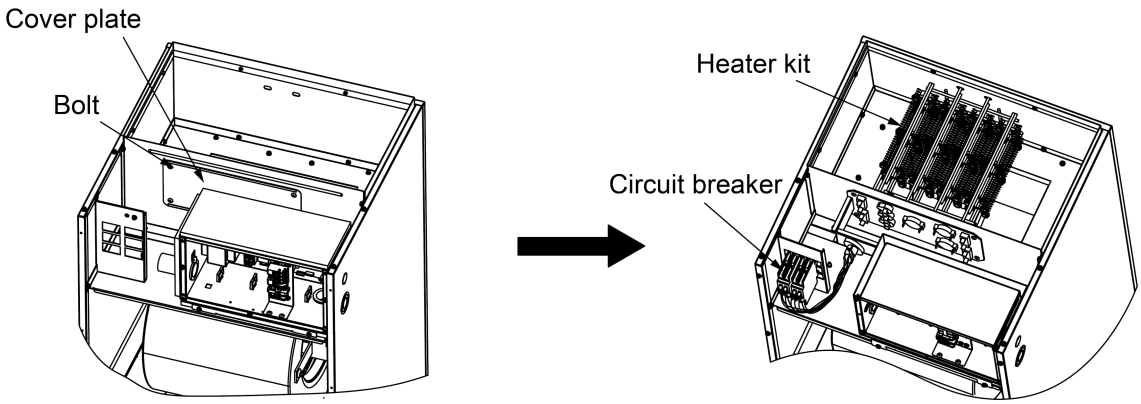

10) Connection of power cords and wired controller.

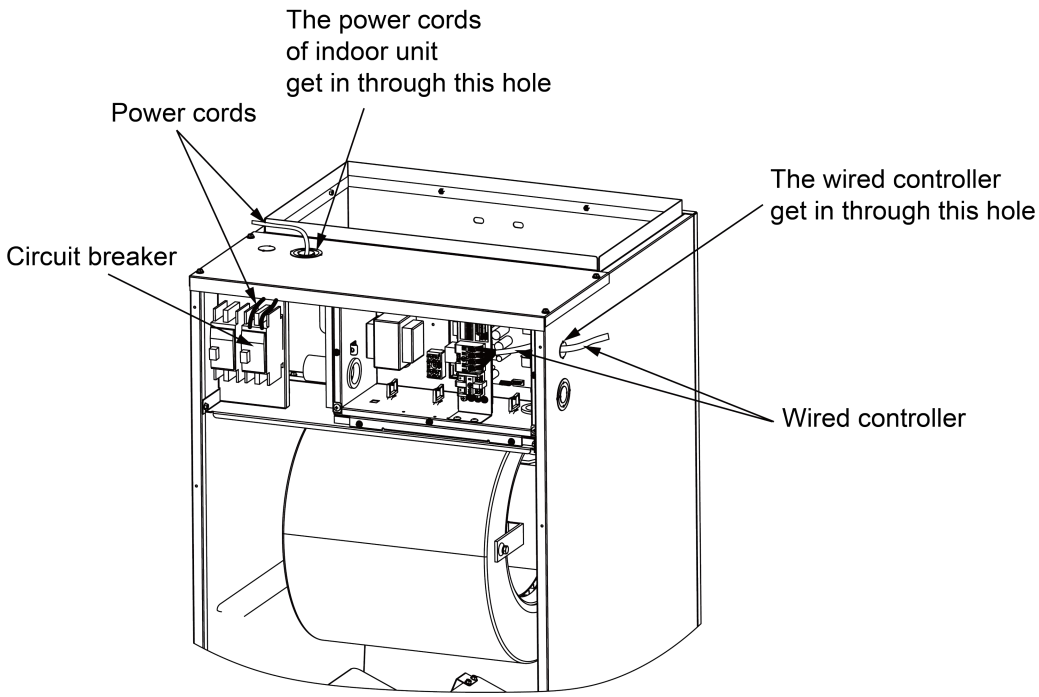

7.2.13 AHU-KIT Type

Size of control box for GMV-N12U/A-T(U)、GMV-N24U/A-T(U) 、GMV-N48U/A-T(U)、GMV-N96U/A-T(U) and GMV-N192U/A-T(U) (Unit: mm(inch)):

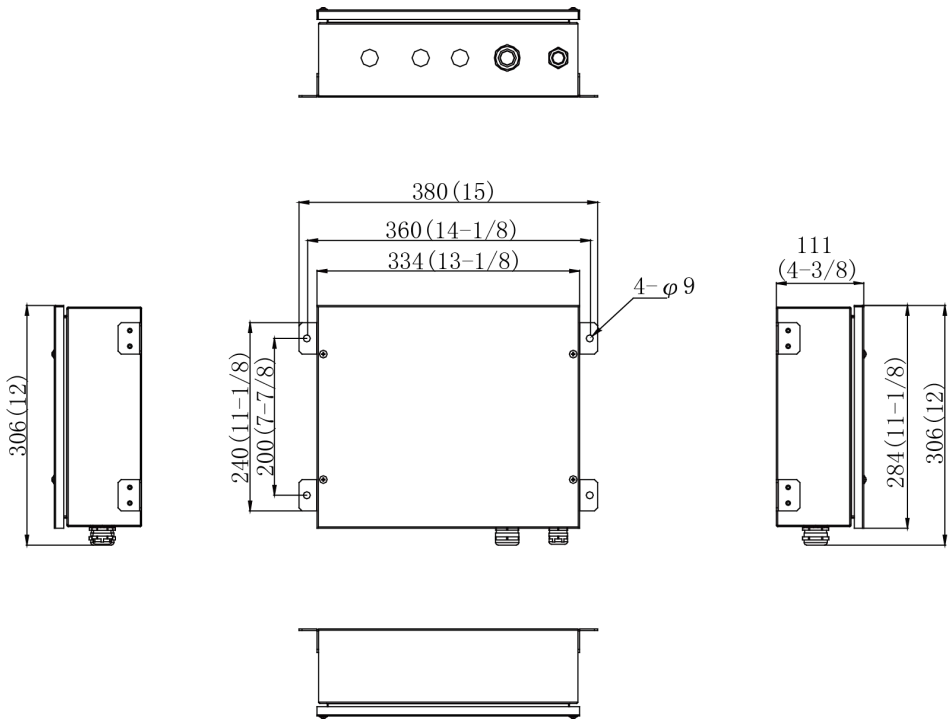

Size of EXV box for GMV-N12U/A-T(U)、 GMV-N24U/A-T(U) 、GMV-N48U/A-T(U) 、GMV-N96U/A-T(U) (Unit: mm(inch)):

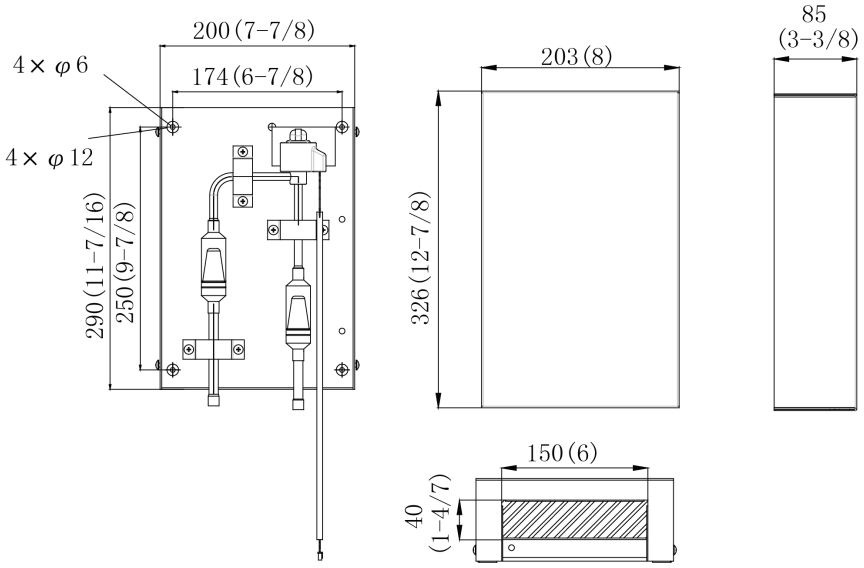

Size of EXV box for GMV-N192U/A-T(U) (Unit: mm(inch)):

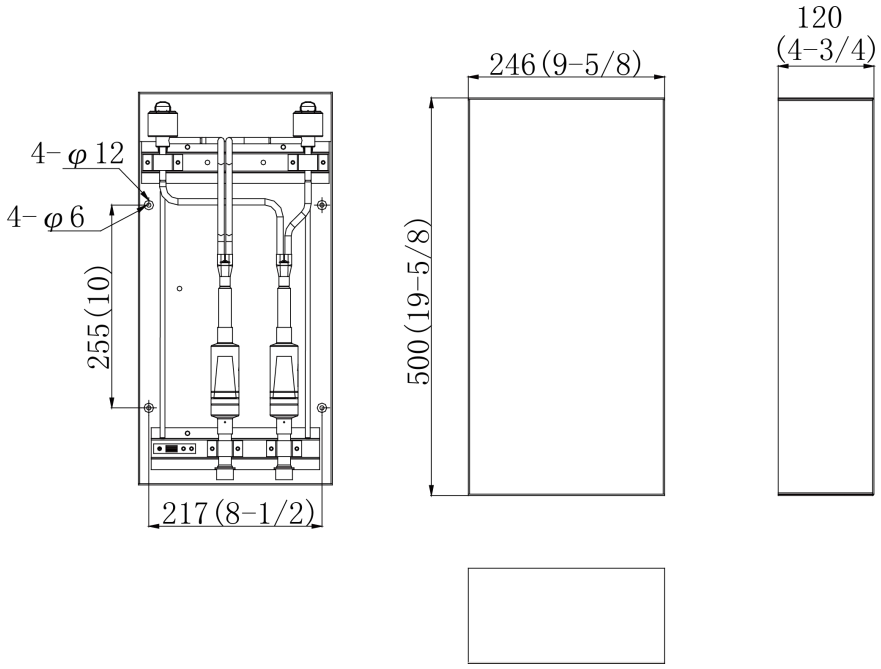

Maintenance space of control space (Unit: mm(inch)):

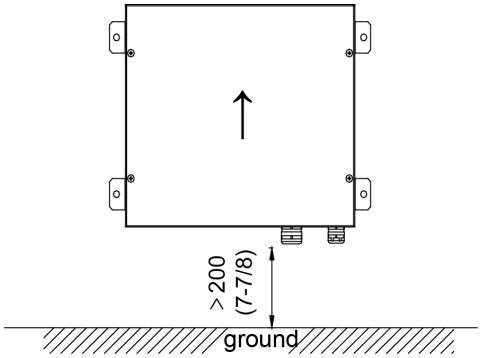

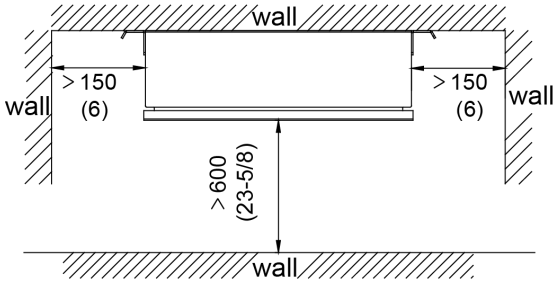

The control box must be installed upwards as the direction of the arrow shown in the figure

Maintenance space of EXV box (Unit: mm(inch)):

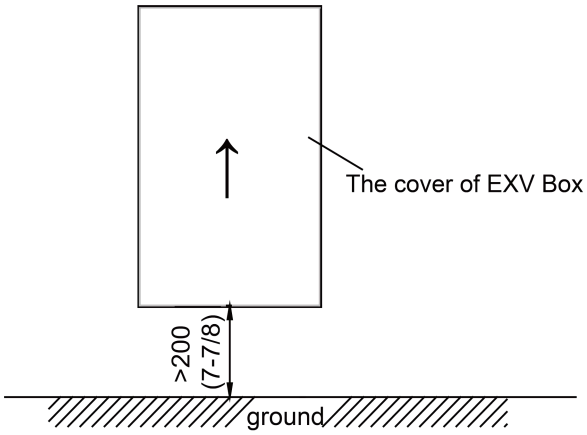

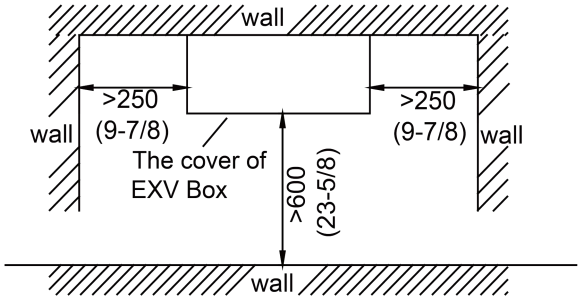

The EXV box must be installed upwards as the direction of the arrow shown in the figure

Size of control box for GMV-N12U/C-T(U)、GMV-N24U/C-T(U) 、GMV-N48U/C-T(U)、GMV-N96U/C-T(U) and GMV-N192U/C-T(U):

Unit: mm(inch)

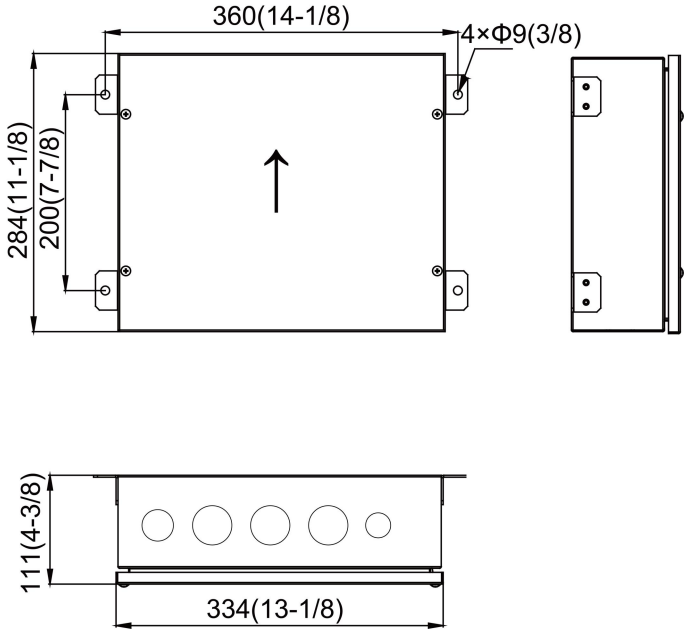

Size of EXV box for GMV-N12U/C-T(U):

Unit: mm(inch)

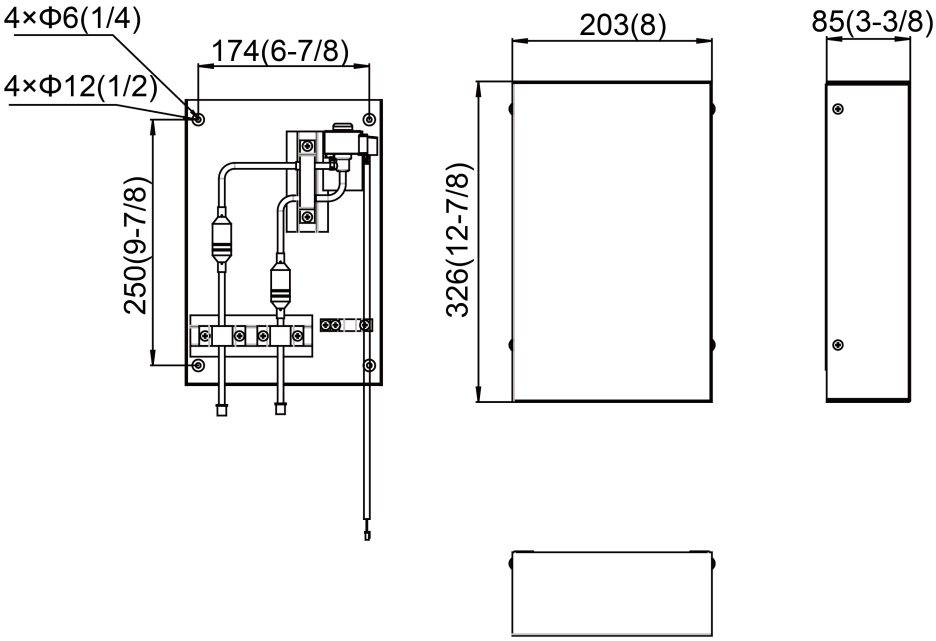

Size of EXV box for GMV-N24U/C-T(U)、GMV-N48U/C-T(U)、GMV-N96U/C-T(U):

Unit: mm(inch)

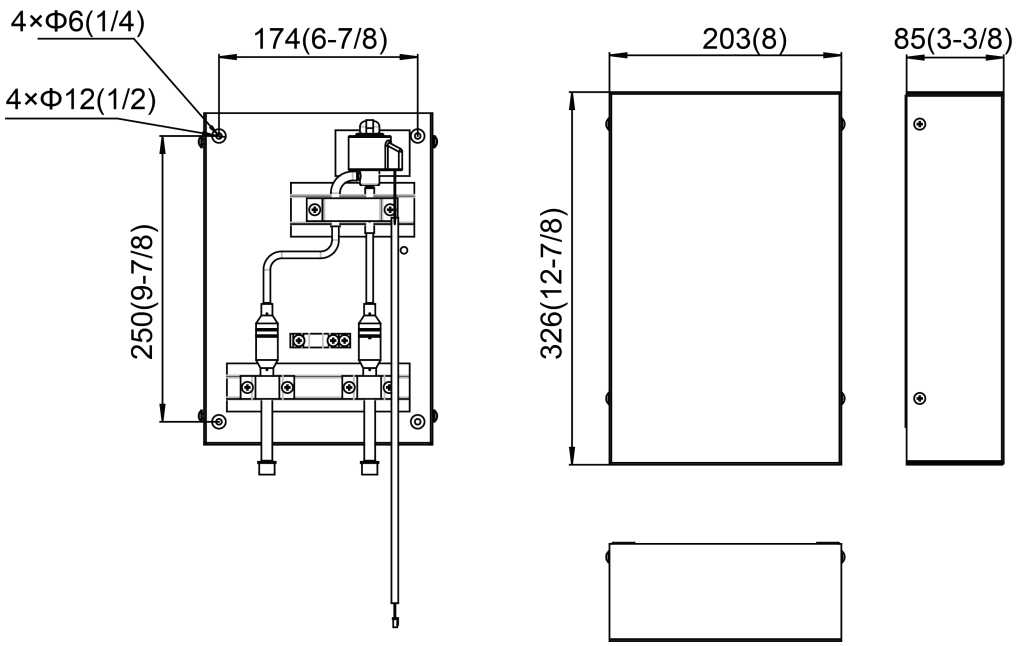

Size of EXV box for GMV-N192U/C-T(U):

Unit: mm(inch)

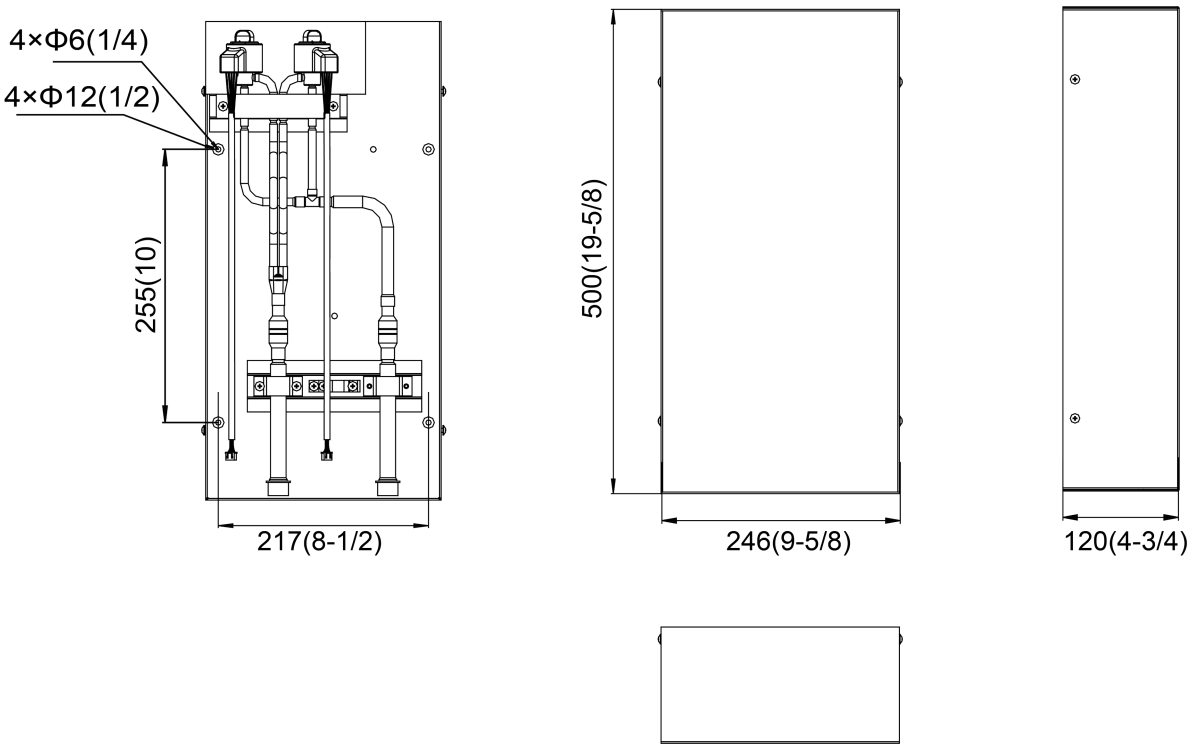

Maintenance space of control space:

Unit: mm(inch)

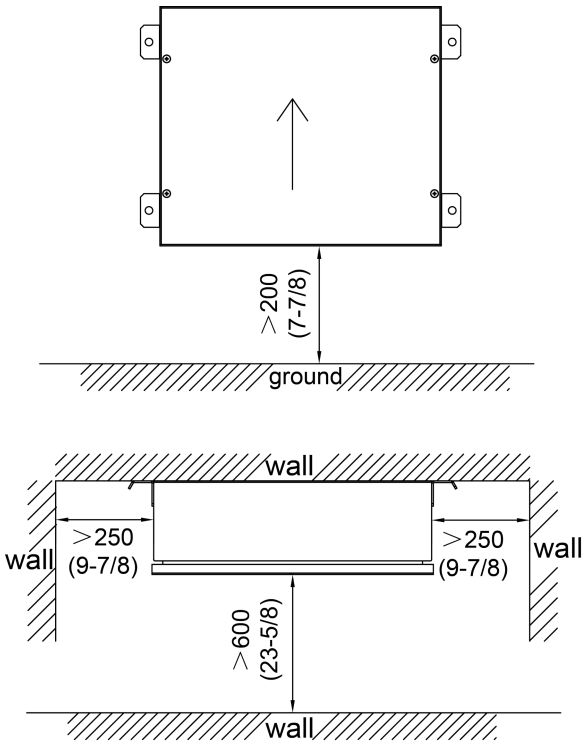

The control box must be installed upwards as the direction of the arrow shown in the figure

Maintenance space of EXV box:

Unit: mm(inch)

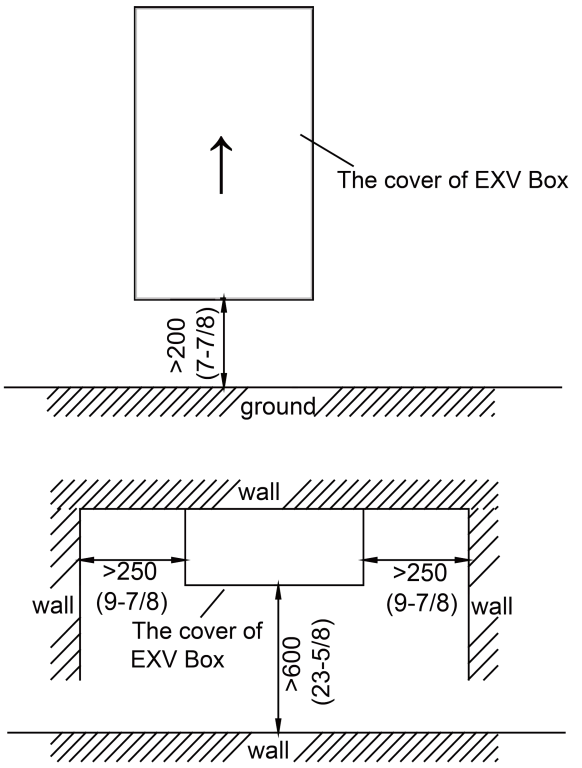

The EXV box must be installed upwards as the direction of the arrow shown in the figure

7.2.14 One-way Cassette Type

Outline and installation dimension

Unit: mm(inch)

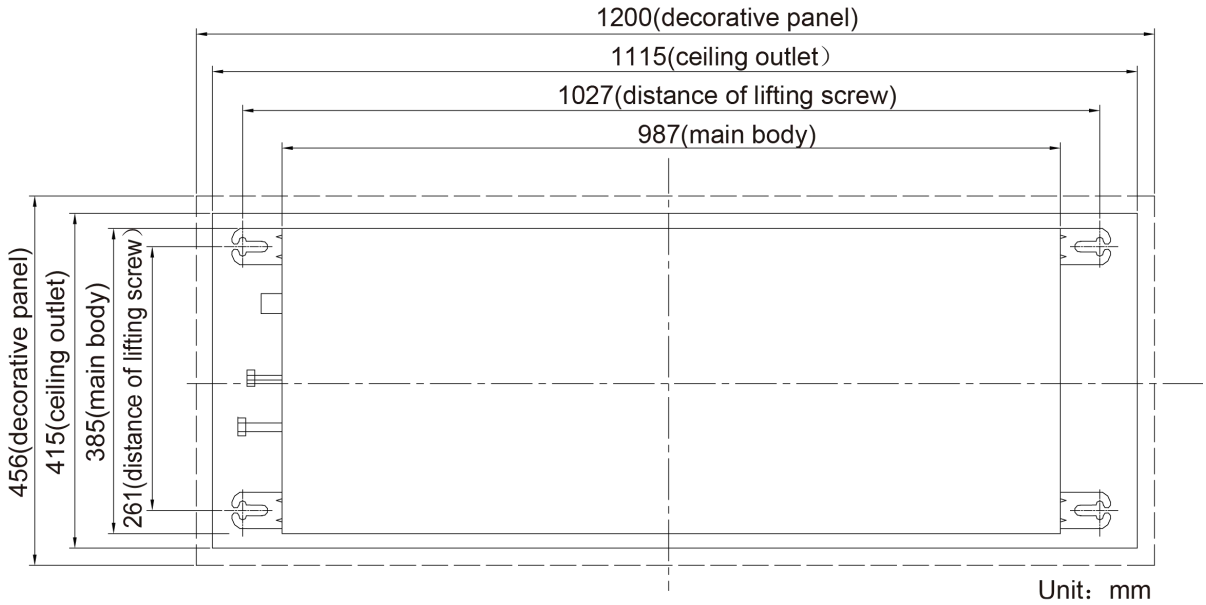

Model	A	B	C	D
MV-ND07TD/A-T(U)	987(38-7/8)	1027(40-3/8)	1115(43-7/8)	1200(47-1/4)
GMV-ND09TD/A-T(U)	987(38-7/8)	1027(40-3/8)	1115(43-7/8)	1200(47-1/4)
GMV-ND12TD/A-T(U)	987(38-7/8)	1027(40-3/8)	1115(43-7/8)	1200(47-1/4)

Installation space

Unit: mm(inch)

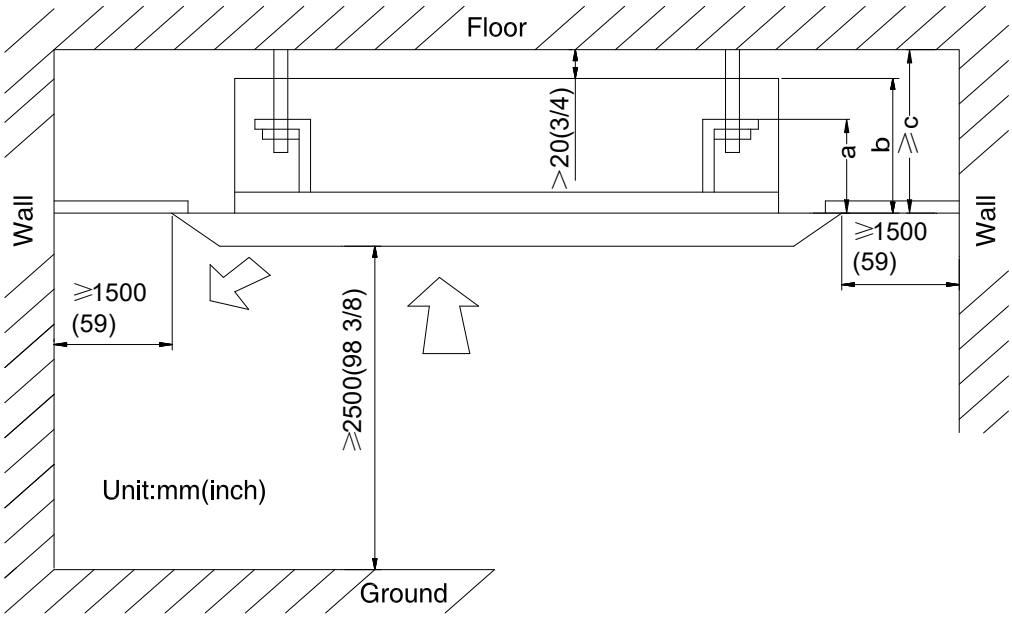

Model	a	b	c
07	141(5 1/2)	207(8 1/8)	227(8 7/8)
09	141(5 1/2)	207(8 1/8)	227(8 7/8)
12	141(5 1/2)	207(8 1/8)	227(8 7/8)

7.2.15 General ESP Duct Type Series

a) Outline and installation dimension

The following diagram is applicable for units with the cooling capacity ranging from 30k Btu/h to 48kBtu/h.

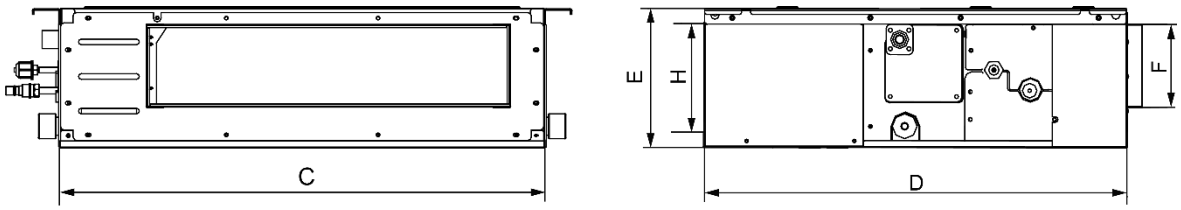

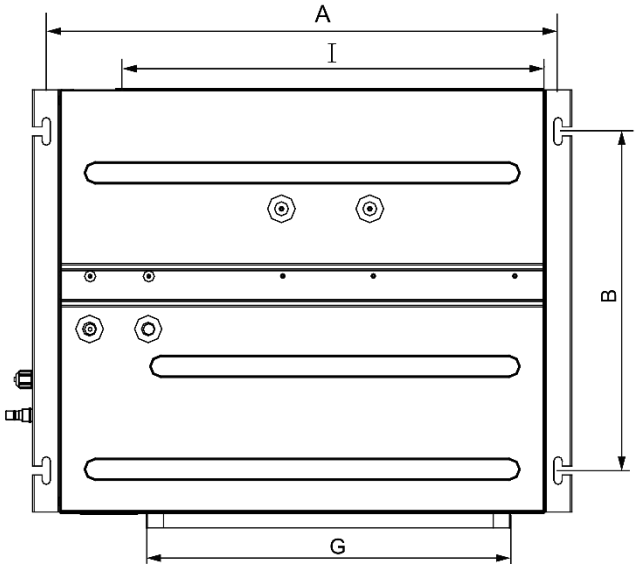

The following table lists the detailed dimensions.

Unit: mm(inch)

Item / Model	A	B	C	D	E	F	G	H	I
GMV-ND30PLS/C-T(U) GMV-ND36PLS/C-T(U) GMV-ND42PLS/C-T(U) GMV-ND48PLS/C-T(U)	1379 (54-5/16)	565 (22-1/4)	1340 (52-3/4)	655 (25-13/16)	260 (10-1/4)	207 (8-1/8)	1153 (45-3/8)	220 (8-11/16)	1188 (46-3/4)

b) Installation space

Unit: mm(inch)

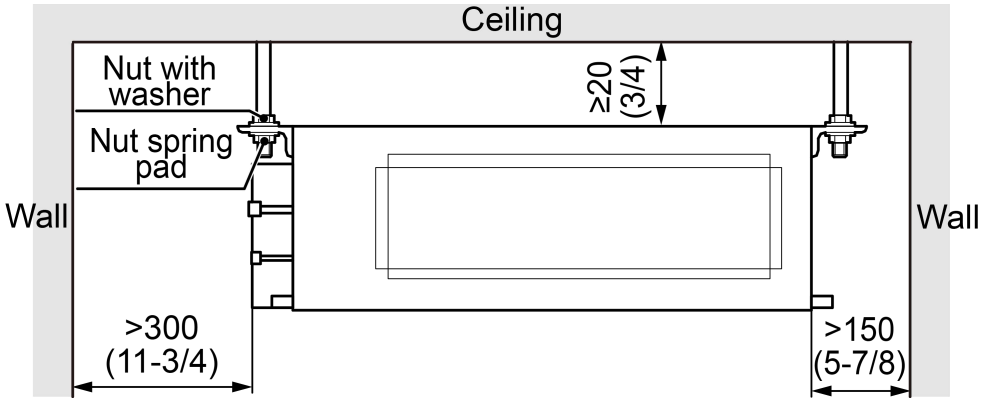

7.2.16 360°Air Discharge Compact Cassette Type

Outline and Installation Dimension

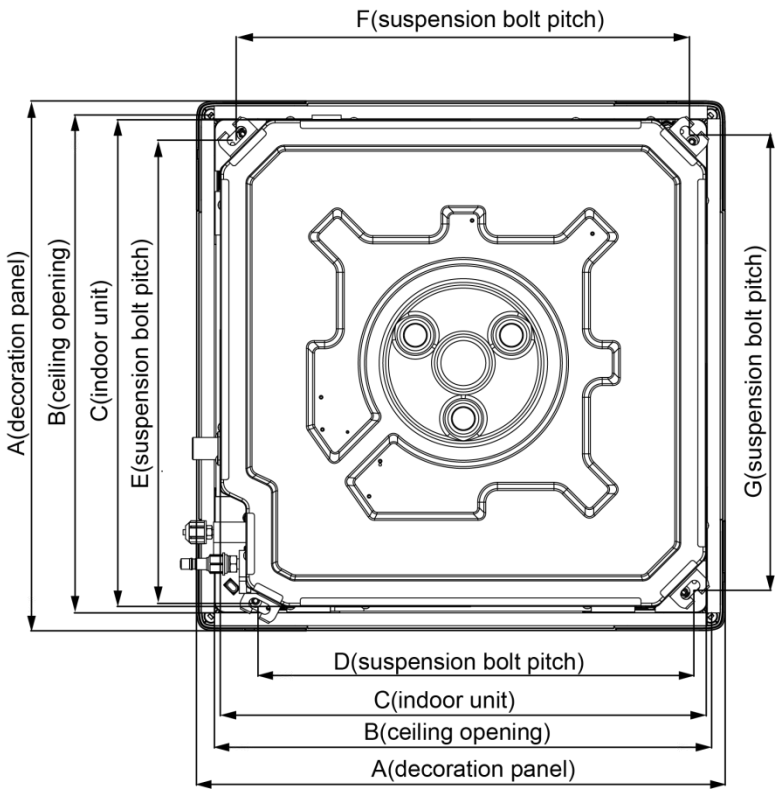

Unit: mm(inch)

Model	A	B	C	D	E	F	G
GMV-ND05T/E-T(U) GMV-ND07T/E-T(U) GMV-ND09T/E-T(U) GMV-ND12T/E-T(U) GMV-ND15T/E-T(U) GMV-ND18T/E-T(U)	620 (24-3/8)	580 (22-13/16)	570 (22-7/16)	505 (19-7/8)	550 (22-5/8)	530 (20-7/8)	530 (20-7/8)

Unit: mm (inch)

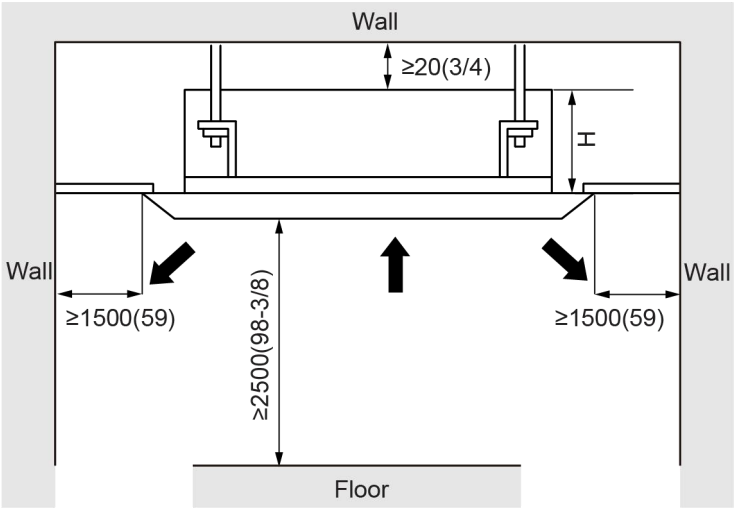

Unit: mm (inch)

Model	H
GMV-ND05~18T/E-T(U)	305(12)

7.2.17 360°Air Discharge Cassette Type

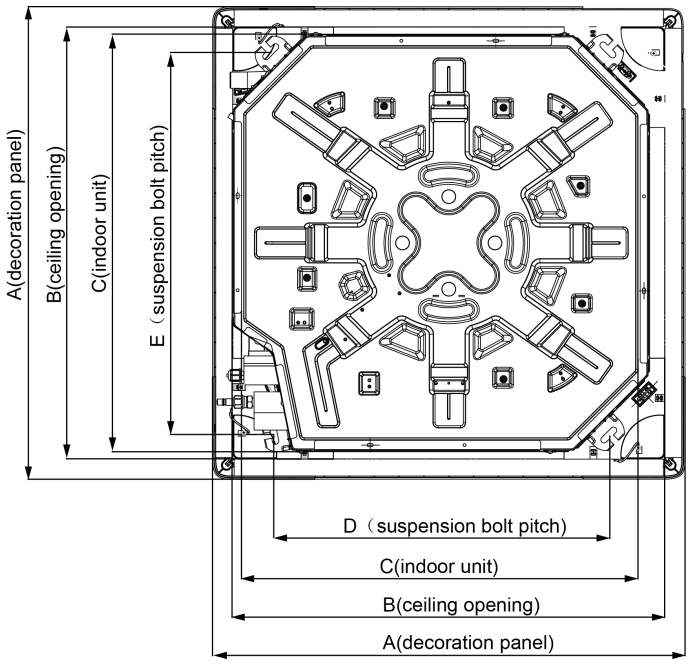

Unit: mm (inch)

Model	A	B	C	D	E
GMV-ND07~54T/C-T(U)	950(37 3/8)	890(35)	840(33 1/8)	680(26 3/4)	780(30 3/4)
GMV-ND07~54T/D-T(U)	950(37 3/8)	890(35)	840(33 1/8)	680(26 3/4)	780(30 3/4)

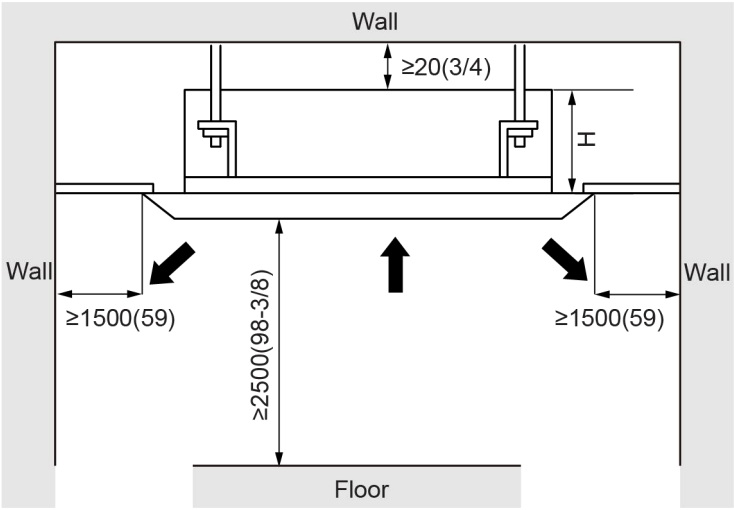

Unit: mm (inch)

Model	H
GMV-ND07~24T/C-T(U)	280(11)
GMV-ND30~54T/C-T(U)	330(13)
GMV-ND07~22T/DT(U)	275(10-3/4)
GMV-ND24~54T/D-T(U)	325(12-3/4)

7.2.18 Dual Fuel A-coil Indoor Unit

Outline and installation dimension

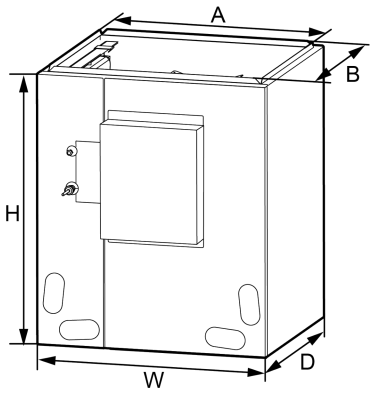

Unit: mm (inch)

Model	Dimension				
	W	D	H	A	B
GMV-N24AC/VA-T(U)	445(17-1/2)	540(21-1/4)	584(23)	403(15-7/8)	492(19-3/8)
GMV-N36AC/VA-T(U)	445(17-1/2)	540(21-1/4)	584(23)	403(15-7/8)	492(19-3/8)
GMV-N48AC/VA-T(U)	622(24-1/2)	540(21-1/4)	724(28-1/2)	581(22-7/8)	492(19-3/8)
GMV-N60AC/VA-T(U)	622(24-1/2)	540(21-1/4)	724(28-1/2)	581(22-7/8)	492(19-3/8)

Installation space

Unit: mm (inch)

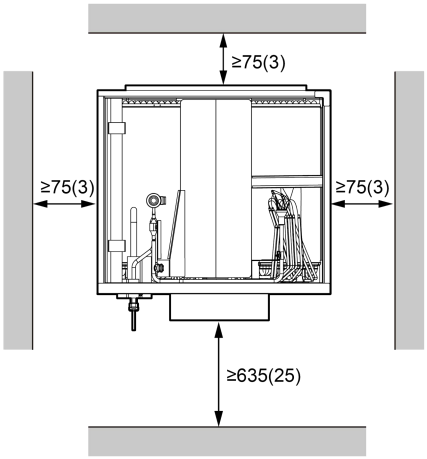

7.3 Locating the Manhole and Air Return Vent

In addition to consideration of the sufficient maintenance space to be reserved during unit locating, it is also important to locate the manhole. If manhole locating is improper, it will also make future maintenance and repair more difficult.

The manhole size can accommodate the shoulder width of a normal adult. It cannot be smaller than 450 mm × 450 mm. Usually the indoor unit in the air supply mode of air duct is located at the electric box side of the unit, the distance from the electric box is 50 mm to 100 mm, and maintenance of the pipeline part must also be considered. The pipeline maintenance position of the pipeline is mainly considered for the air raise type indoor unit, so the manhole can be located at a position that ensures the distance between one edge and the connection pipe is 200 mm to 250 mm. The schematic diagram is shown below:

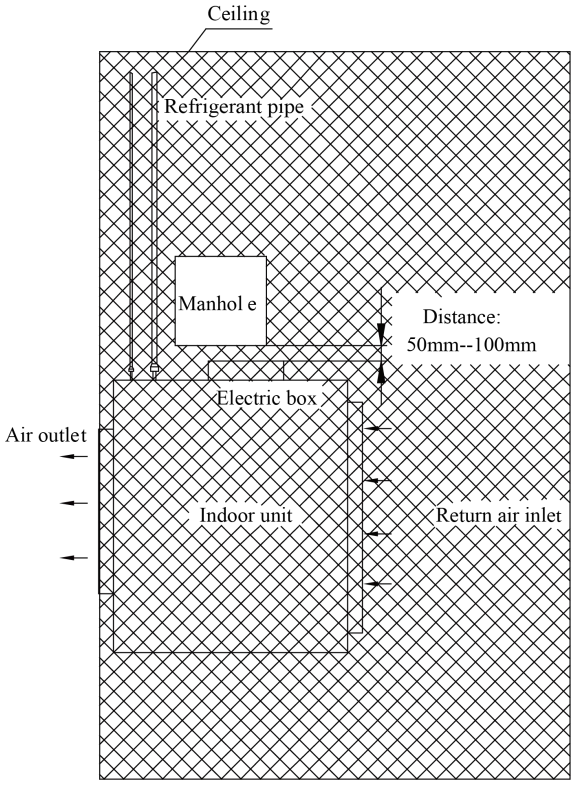

The air return vent position must also be considered for the indoor unit in the air supply mode of air duct. The air return vent is responsible for air return of the unit, and also used to complete maintenance of the indoor fan motor and filter screen. Therefore, in addition to meeting the air return design requirements mentioned above, there is a must to ensure the requirement for replacing the motor and filter screen.

(1) Do not set the air return vent of the unit near the door, toilet or kitchen; otherwise problems such as condensation and peculiar smell may be caused.

(2) The length direction of the air return vent cannot be smaller than 2/3 of the air return vent length of the unit.

(3) If the air return vent is set directly behind the unit, the distance between its position and the unit cannot be greater than 300 mm.

The width of the air return vent cannot be smaller than 200 mm.

(4) For the design of also using the air return vent as a manhole for the electric box, the maintenance position should also be reserved at the electric box side according to the above principle. At the same time, it is required to consider whether the position of the air return vent can ensure easy removal and replacement of the fan motor and filter screen. Therefore, the air return vent should be enlarged to 1.5 to 2 times of the original circulation area according to the actual conditions and on the basis of satisfying the air volume design. The schematic diagram

is shown below:

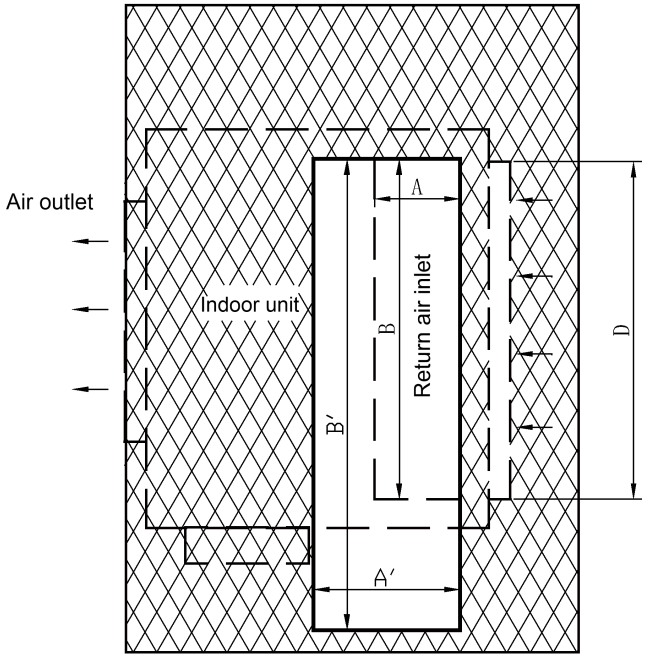

Original air return vent area: S = A×B

Currently air return vent area: S' = A' × B'

S'≥ (1.5~2.0)S

8. Communication Connection Method Between IDU and Control Terminal

There are 4 connection ways between IDU and control terminal. The control terminal includes wired controller and remote signal receiving LED panel. Please refer to the follow:

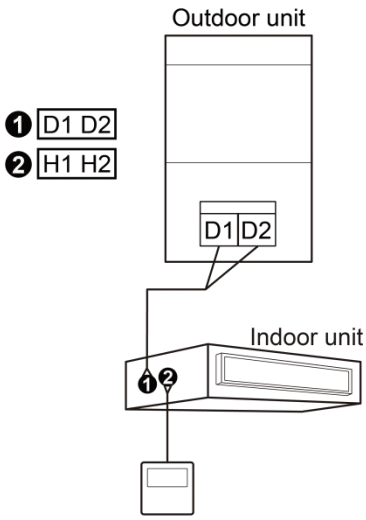

Fig.1 One wired controller or one remote signal receiving LED panel controls one IDU

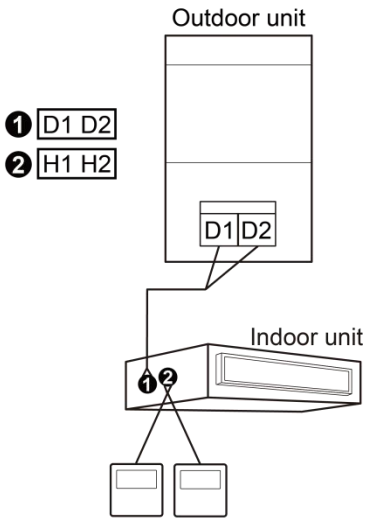

Fig. 2 Two wired controllers or one remote signal receiving LED panel and one wired controller control one IDU

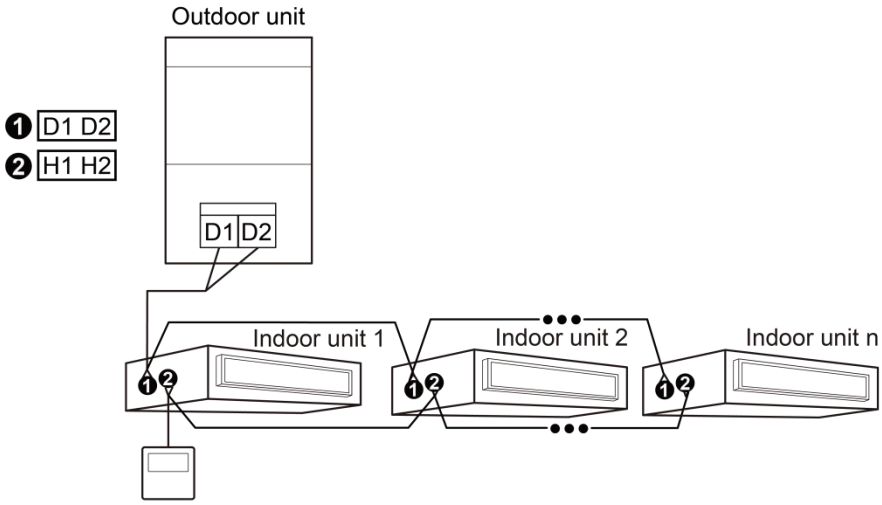

Fig. 3 One wired controller or one remote signal receiving LED panel controls multiple IDU

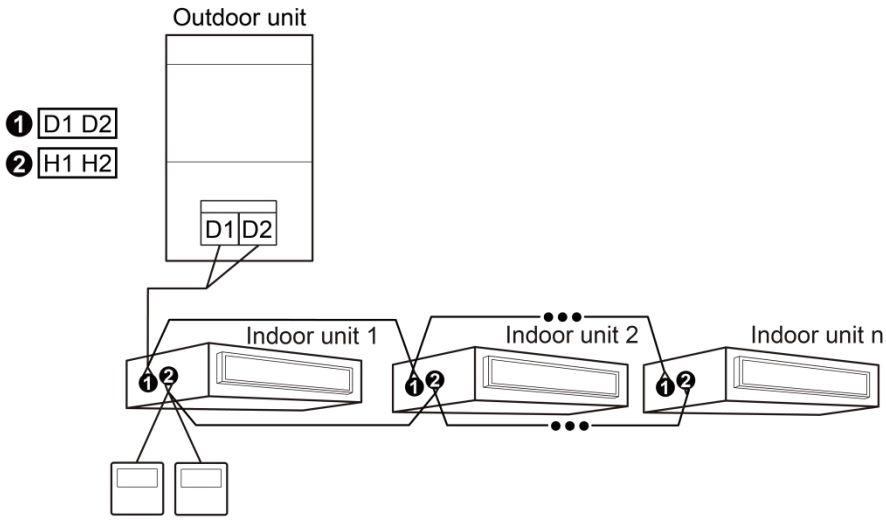

Fig. 4 Two wired controllers or one remote signal receiving LED panel and one wired controller control multiple IDU

8.1 Communication Connection Method Between IDU and Wired Controller

When two wired controllers control several IDUs at the same time, the wired controller can be connected to either IDU, the connected IDU shall be the IDU of the same series, meanwhile, set one of the wired controllers and only one as the deputy wired controller. The amount of IDU controller by wired controller shall not exceed 16 sets, and the connected IDU shall be in the same IDUs' network.

Set deputy wired controller under ON/OFF status:

Long press "Function" button for 5s in the wired controller which needs to be set as the deputy wired controller, the temperature area will display "C00", then long press "Function" button for 5s to enter parameter setting interface for wired controller, at this time, the temperature area will display "P00"

acquiescently.

Press “ ”or“ ” button to select P13 as the parameter code and “Mode” button to switch to parameter value setting. At this time, the parameter value will blink, then press “ ”or“ ” to select “02”code. Press “Confirm/Cancel” button to complete the setting.

Press “Confirm/Cancel” button to return to the previous operation, until existing parameter setting.

Parameter setting list for the user is as follow:

Parameter code	Parameter name	Parameter scope	Default value	Remark
P13	Set up address for wired controller	01: master wired controller 02: slave wired controller	01	When 2 wired controllers control one or more IDUs, they shall have different addresses. Slave wired controller (02) can’t set up units’ parameters except its address.

NOTES!

a All wired controllers are set as master wired controllers at the factory.

b Under parameter setting status: fan speed, timer, sleep and swing buttons are invalid, press “ON/OFF” button to return to the main interface immediately, but it will not execute the startup/shutdown operation.

c Under parameter setting status, the signal of remote controller is invalid.

8.2 Connection Method Between Duct Type IDU and Remote Signal Receiving LED Panel

(1) When the remote signal receiving LED panel is connected with multi VRF unit, the wiring methods as shown in Figure 1, Figure 2, Figure 3 and Figure 4 can be adopted, but please pay attention to the follow:

① When one remote signal receiving LED panel or one remote signal receiving LED panel and one wired controller control several indoor units simultaneously, the remote signal receiving LED panel can connect any indoor unit, but the connected indoor unit shall be of the same indoor unit series and the connected indoor unit shall be in the same multi VRF system. When it is applied together with the wired controller, please set the indoor unit quantity of group control in the wired controller.

② When the remote signal receiving LED panel controls several indoor units simultaneously, the settings for all indoor units are the same.

(2) In the wiring methods as shown in Figure 2, Figure 4, there can’t be two remote signal receiving

LED panels simultaneously and only one wired controller and one remote signal receiving LED panel are allowable in the same system. The wired controller can be set as master or slave wired controller and the remote signal receiving LED panel address will switch automatically (no need to set remote signal receiving LED panel address manually) according to the wired controller address (master/slave wired controller). The total quantity of remote signal receiving LED panel and wired controller can't exceed two.

(3) The remote signal receiving LED panel interface is non-polar, but it can't be connected with heavy current.

(4) Wired controller and remote signal receiving LED panel can be used at the same time.

(5) When selecting remote signal receiving LED panel, selecting the remote controller at the same time.

9. Optional Components

—	Model	Remarks
Remote controller	YAP1F	Optional: Duct type indoor units Standard: Wall-mounted, cassette and floor-ceiling indoor units
Classic wired controller	Wired controller XK46	Optional: Cassette, floor ceiling and wall-mounted indoor units Standard: Duct and concealed floor standing indoor units
Wired controller	Wired controller XK79	With the access control function
	Wired controller XE70-33/H, XE7A-24/H	—
Remote signal receiving LED panel	JS13	—

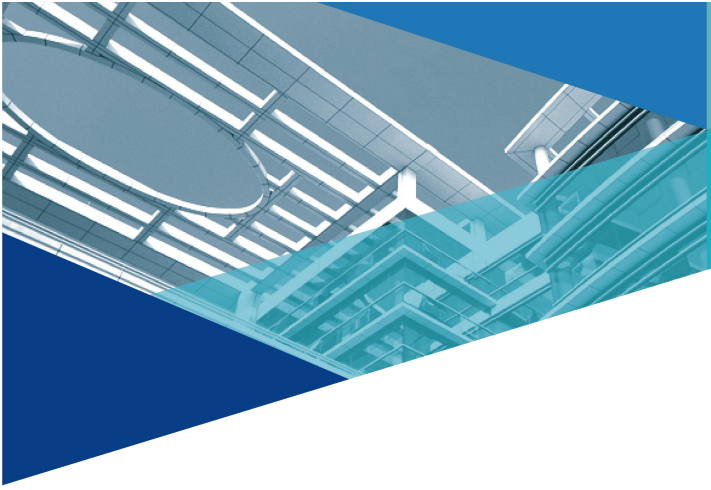

GREE ELECTRIC APPLIANCES, INC. OF ZHUHAI 519070

Add: West Jinji Rd,Qianshan Zhuhai,Guangdong,China
Tel: (+86-756)8522218
Fax: (+86-756)8669426
E-mail: gree@cn.gree.com www.gree.com

SJ00455894